UTILITY EXTENSION TO EXISTING BUILD READY PAD MONTACELLO WAYNE COUNTY INDUSTRIAL DEVELOPMENT AUTHORITY, INC. WAYNE COUNTY, KENTUCKY

VICINITY MAP
NOT TO SCALE

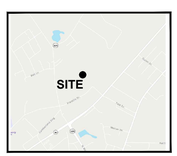

LOCATION MAP
NOT TO SCALE

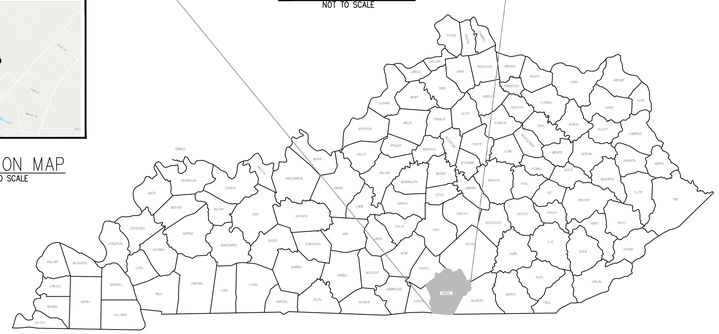

Sheet Titles	INDEX	Sheet Nos.
COVER		
GENERAL NOTES		GN-1
SITE PLAN VIEW		C-1
SITE PLAN VIEW		C-2
SITE PLAN VIEW		C-3
SITE PLAN VIEW		C-4
PUMP STATION DETAIL		PS-1
PUMP STATION DETAIL-ELECTRICAL		E-1
SANITARY SEWER DETAIL		SD-1
SANITARY SEWER DETAIL		SD-2
WATER LINE DETAIL		WD-1
WATER LINE DETAIL		WD-2

MSE OF KENTUCKY, INC.
Engineers
Architects
Planners

624 Wellington Way
Lexington, KY 40503
www.mselex.com

Phone: (859)223-5694
Fax: (859)223-2607

MARCH, 2024

SET NO. _____

MSE PROJECT No. 2041-08

_____

Plot Date: 6/22/2023 11:50 PM

OWNER:
MONTICELLO/WAYNE CO. IDA
FRANK PHILLIPS, CHAIRMAN
606-348-5591

GENERAL NOTES:

1. PRIOR TO ANY CONSTRUCTION OR DEMOLITION ACTIVITIES, THE CONTRACTOR SHALL BE RESPONSIBLE FOR VERIFYING LOCATIONS OF ALL EXISTING UTILITIES WITHIN THE PROJECT LIMITS. CONTRACTOR SHALL MAINTAIN UNINTERRUPTED UTILITY SERVICE TO ADJACENT FACILITIES DURING CONSTRUCTION. CONTRACTOR SHALL COORDINATE WORK WITH UTILITY OWNERS. SHOULD DAMAGE OCCUR TO EXISTING OR NEW UTILITY SERVICES DURING CONSTRUCTION, IT IS THE CONTRACTOR'S SOLE RESPONSIBILITY TO REPAIR AND/OR REPLACE SAID DAMAGE AT THE CONTRACTOR'S EXPENSE AT NO ADDITIONAL COST TO THE OWNER. NEW UTILITY WORK, REPAIRS, REPLACEMENTS AND/OR RELOCATIONS SHALL MEET THE APPROVAL OF THE UTILITY OWNER.

2. CONTRACTOR TO MARK AND PROTECT ALL UNDERGROUND UTILITIES AND OVERHEAD OBSTRUCTIONS.

3. CONTRACTOR SHALL BE RESPONSIBLE FOR OBTAINING ALL REQUIRED PERMITS INCLUDING GRADING PERMIT FROM LOCAL AUTHORITIES AND THE SUBMISSION OF A NOTICE ON INTENT (NOI) FOR STORMWATER DISCHARGE WITH THE KENTUCKY DEPARTMENT OF WATER PRIOR TO ANY CONSTRUCTION ACTIVITY. UPON COMPLETION OF THE PROJECT, THE CONTRACTOR SHALL SUBMIT A NOTICE OF TERMINATION (NOT) TO THE KENTUCKY DIVISION OF WATER. THE CONTRACTOR SHALL PROVIDE THE ENGINEER WITH A COPY OF ALL PERMITS OBTAINED.

4. VEGETATIVE AND STRUCTURAL EROSION AND SEDIMENT CONTROL PRACTICES SHALL BE CONSTRUCTED AND MAINTAINED ACCORDING TO MINIMUM STANDARDS AND SPECIFICATIONS OF THE "KENTUCKY BEST MANAGEMENT PRACTICES FOR CONSTRUCTION ACTIVITIES" DATED AUGUST 1994 AS PREPARED BY THE DIVISION OF CONSERVATION AND DIVISION OF WATER, NATURAL RESOURCES AND ENVIRONMENTAL PROTECTION CABINET AND/OR THE KENTUCKY TRANSPORTATION CABINET (KYTC) STANDARDS. CONTRACTOR SHALL USE THE "KENTUCKY EROSION PREVENTION AND SEDIMENT CONTROL FIELD GUIDE" AS THE DEFINITION OF REQUIREMENTS FOR CONSTRUCTION ACTIVITY.

5. EROSION AND SEDIMENT CONTROL MEASURES MUST BE IN PLACE AND FUNCTIONAL BEFORE EARTH MOVING OPERATIONS BEGIN AND MUST BE PROPERLY MAINTAINED THROUGHOUT THE CONSTRUCTION PERIOD. CONTRACTOR SHALL BE RESPONSIBLE FOR INSTALLATION OF ANY ADDITIONAL EROSION CONTROL MEASURES NECESSARY TO PREVENT EROSION AND SEDIMENTATION AS DETERMINED BY OWNER OR THE GOVERNING AGENCY. CONTRACTOR SHALL INSPECT ALL EROSION CONTROL MEASURES WEEKLY AND AFTER EACH RUN-OFF PRODUCING RAINFALL EVENT. ANY NECESSARY REPAIRS OR CLEANUP TO MAINTAIN THE EFFECTIVENESS OF THE EROSION AND SEDIMENT CONTROL DEVICES SHALL BE MADE IMMEDIATELY WITHIN 24 HOURS.

6. CONTRACTOR SHALL BE RESPONSIBLE FOR PROVIDING AND MAINTAINING CONSTRUCTION ENTRANCES AND SHALL KEEP ALL ROADS AND STREETS FREE ROM MUD, DIRT AND DEBRIS.

7. THE CONTRACTOR MUST PROVIDE TRAFFIC CONTROL IN ACCORDANCE WITH THE MANUAL FOR UNIFORM TRAFFIC CONTROL DEVICES AND THE KENTUCKY DEPARTMENT OF HIGHWAYS GUIDANCE MANUAL.

8.THE CONTRACTOR MUST MAINTAIN ACCESS TO EXISTING BUSINESSES AND EXISTING ROADS.

9. IN ADDITION TO PREVENTING SEDIMENT AND EROSION CONTROL DURING CONSTRUCTION, THE CONTRACTOR MUST MINIMIZE OR ELIMINATE THE POTENTIAL FOR CHEMICAL CONTAMINANTS TO ENTER THE SOIL OR BE CARRIED ACROSS THE SITE BY STORM WATER. POTENTIAL CONTAMINANTS NORMALLY ASSOCIATED WITH CONSTRUCTION ACTIVITY INCLUDE GASOLINE AND DIESEL FUEL, OIL, GREASE, ANTIFREEZE, TERMITE SOIL TREATMENT CHEMICALS, FERTILIZER, ASPHALT OILS, EMULSIONS AND SMALL PARTICLE SIZE CONSTRUCTION DEBRIS. THE CONTRACTOR MUST EMPLOY VARIOUS BEST MANAGEMENT PRACTICES TO ELIMINATE OR MINIMIZE THE POTENTIAL FOR THESE CONTAMINANTS TO REACH THE SOIL AND/OR DRAINAGE SYSTEMS.

10. ALL SURFACE RUNOFF SHALL BE DIRECTED AWAY FROM ROADWAYS AND BUILDINGS AND DIRECTED TO DRAINAGE STRUCTURES, DITCHES OR SWALES.

11. CONTRACTOR SHALL ACCURATELY RECORD ALL UTILITIES CONSTRUCTED OR ENCOUNTERED ON "AS-BUILT" DRAWINGS AND PROVIDE TO OWNER AND ENGINEER.S SHA

12. MATERIALS AND METHODS OF CONSTRUCTION FOR GRADING AND DRAINAGE STRUCTURES INCLUDING PIPING AND HEADWALLS SHALL BE IN ACCORDANCE WITH KENTUCKY TRANSPORTATION CABINET (KYTC) "STANDARD SPECIFICATIONS FOR ROAD AND BRIDGE CONSTRUCTION", CURRENT EDITION.

13. CONTRACTOR SHALL NOTIFY ENGINEER OF ANY AREAS WHERE UNACCEPTABLE SOILS, SINKHOLES, WET AREAS OR OTHER CONDITIONS ARE ENCOUNTERED WHICH MAY ADVERSELY AFFECT THE SITE. IF DIRECTED BY ENGINEER, REMOVE UNSUITABLE SOILS AND REPLACE THEM WITH ACCEPTABLE SOILS.

14. EARTH AND ROCK WORK IS UNCLASSIFIED. NO EXTRA PAYMENT WILL BE MADE FOR ROCK EXCAVATION.

15. CONTRACTOR SHALL MAKE MINOR ADJUSTMENTS IN GRADING PLAN AS NECESSARY TO PROVIDE FOR SMOOTH TRANSITION FOR EXISTING ENTRANCES.

16. ALL SPOT ELEVATIONS INDICATE FINISH GRADE OF SURFACE. CONTRACTOR SHALL MAKE ADJUSTMENTS TO ESTABLISH GRADES OF SUB-BASE OR SUBGRADE.

17. IT SHALL BE THE CONTRACTOR'S SOLE RESPONSIBILITY TO DETERMINE EARTHWORK (EXCAVATION AND EMBANKMENT) QUANTITIES.

18. AREAS TO BE FILLED, EXCAVATED, LANDSCAPED, OR REGRADED SHALL BE STRIPPED OF ALL VEGETATION AND TOPSOIL. ALL TOPSOIL SHALL BE STOCKPILED FOR REDISTRIBUTION. STOCKPILE AREAS SHALL HAVE SOIL EROSION PROTECTION IN THE FORM OF SILT FENCING INSTALLED AROUND THE PERIMETER OR OTHER SUCH ACCEPTABLE MEASURES.

19. ALL SOIL FILL MATERIAL PLACED ON THIS PROJECT SHOULD BE COMPACTED WITH APPROPRIATE EQUIPMENT IN UNIFORM LAYERS TO THE MODIFIED PROCTOR MAXIMUM DRY DENSITY (ASTM D-1557) AS RECOMMENDED IN THE GEOTECHNICAL REPORT FOR THIS PROJECT.

20. FILL MATERIAL SHALL BE PROPERTY MONITORED USING FIELD DENSITY TEST CHECKS. ALL TESTING SHALL BE PROVIDED BY A QUALIFIED INDEPENDENT TESTING AGENCY. SHOULD REPORTS INDICATE SPECIFIED COMPACTION IS NOT ACHIEVED, THE CONTRACTOR SHALL REMOVE MATERIAL, REPLACE, AND RETEST AT NO ADDITIONAL COST TO THE OWNER UNTIL ACCEPTABLE RESULTS ARE ACHIEVED. COPIES OF TEST REPORTS SHALL BE PROVIDED TO THE ENGINEER.

21. CONTRACTOR SHALL PROVIDE REDISTRIBUTION OF STOCKPILED OR IMPORT TOPSOIL AS REQUIRED OVER ALL FINISHED GRADE SOIL ARES TO A MINIMUM OF 12 INCHES AND PROVIDE FINAL SITE GRADING TO INSURE POSITIVE DRAINAGE AWAY FROM ROADWAYS AND BUILDINGS. AFTER FINAL GRADING, ANY LOW SPOTS WHICH ALLOW WATER TO POND SHALL MAKE ANY NECESSARY MINOR GRADE ADJUSTMENTS AS REQUIRED TO BEST FIT THE ACTUAL SITE CONDITIONS. CONTRACTOR SHALL PROVIDE BORROW MATERIAL AS REQUIRED FOR FILLING EXCAVATIONS, HOLES AND OTHER SUCH OPENINGS.

22. ALL EARTH GRADED AREAS SCARRED OR DENUDED BY THE CONSTRUCTION ACTIVITY SHALL BE SEEDED AND PROTECTED IN ADDITION TO THE PROVISIONS OF OTHER EROSION AND SEDIMENT CONTROL MEASURES AS REQUIRED.

23. ALL SURPLUS AND WASTE MATERIALS SHALL BE TRANSPORTED AND DISPOSED OF OFF-SITE IN ACCORDANCE WITH ALL APPLICABLE LOCAL, STATE AND FEDERAL REGULATIONS AND CODES UNLESS OTHERWISE APPROVED BY OWNER. NO BURNING OR BURYING OF TREES, BRUSH, CONSTRUCTION DEBRIS, RUBBISH, ETC. SHALL BE ALLOWED ON SITE UNLESS OWNER APPROVAL IS OBTAINED.

UTILITY CONSTRUCTION WITHIN ROADWAY AREA

NO ADDITIONAL FUNDS WILL BE PAID TO CONTRACTOR FOR SPECIAL CONSTRUCTION NECESSARY TO COMPLY WITH THE FOLLOWING REQUIREMENTS:

UTILITY CONTRACTOR SHALL INSURE THAT FINISHED PIPELINES, BOTH WATER AND SEWER, HAVE SPECIFIED DEPTH OF COVER FROM FINISHED GRADES, INCLUDING ROADWAY AND ROADWAY DITCHES. CAREFUL ATTENTION SHALL BE PAID TO AVOID CONFLICT WITH PROPOSED DITCHES, STORM DRAINS AND ROADWAY EXCAVATION. BACKFILL IN PIPELINES WITHIN THE ROADWAY LIMITS (PAVEMENT AND SHOULDERS) SHALL BE CRUSHED STONE AS SPECIFIED. UTILITY CONTRACTORS SHALL INCLUDE EXTRA DEPTH TRENCHING IF NECESSARY TO YIELD REQUIRED COVER AFTER ROADWAY EXCAVATION AND USE CRUSHED STONE TO THE ELEVATION NECESSARY TO YIELD A CRUSHED STONE TRENCH BACKFILL UNDER PAVEMENT AND SHOULDERS.

UTILITY GENERAL NOTES

EXISTING GRADE ELEVATIONS SHOWN IN PROFILE AND CONTOURS SHOWN IN PLAN VIEW WERE COMPILED BY COMPUTER METHODS FROM AERIAL PHOTOGRAPHY.

CONTRACTOR IS TO PERFORM LAY-OUT AND PRODUCE CUT-SHEETS FOR VERIFICATION OF LINE DEPTHS AND MANHOLE QUANTITIES. CONTRACTOR SHALL UTILIZE CUT-SHEETS IN THE PREPARATION OF HIS AS-BUILT DRAWING TO ACCURATELY PORTRAY THE PROFILE. CUT-SHEETS WILL BE FIELD VERIFIED BY ENGINEER. CONTRACTOR SHALL, DETERMINE THE BOUNDS OF CONSTRUCTION EASEMENTS AND RIGHT-OF-WAYS AND CONFINE ALL CONSTRUCTION ACTIVITY TO THESE AREAS, PROVIDE CONSTRUCTION WARNING SIGNS, BARRICADES AND FLAGMEN AS NECESSARY. CONTRACTOR SHALL PREVENT SOIL EROSION, CONTROL SILT RUN-OFF, PROVIDE MULCH, SILT FENCES, STRAW BALES OR OTHER MEASURES AS NECESSARY. CONTRACTOR SHALL LOCATE ANY EXISTING UTILITIES.

WHERE EXISTING UTILITIES ARE SHOWN, LOCATIONS ARE APPROXIMATE. CONSULT WITH APPLICABLE UTILITY COMPANIES TO DETERMINE EXACT LOCATIONS OF MAINS AND SERVICE LINES PRIOR TO ANY EXCAVATION. CONTRACTOR SHALL BE RESPONSIBLE FOR PROTECTING PRIVATE PROPERTY. BORE ALL ASPHALT AND CONCRETE PAVEMENT UNLESS THE OWNER APPROVES OPEN CUTTING AND REPAIR. DO NOT CUT FENCES UNLESS THE OWNER APPROVES CUTTING AND REPAIR. PRESERVE TREES AND SHRUBS.

THE CONTRACTOR SHALL HAVE ON HAND AT THE JOB SITE $11\frac{1}{4}$, $22\frac{1}{2}$, 45, AND 90 DEGREE BENDS TO ALLOW FOR THEIR USE WHERE THE ENGINEER REQUIRES INSTALLATION AS NECESSARY.

PIPE JOINT DEFLECTION IS NOT TO EXCEED MANUFACTURER'S ALLOWABLE LIMITS.

AT SOME LOCATIONS, THE CONTRACTOR MAY BE REQUIRED TO PROVIDE EXTRA COVER OVER LINE. COST OF EXTRA COVER IS TO BE INCLUDED IN UNIT PRICE BID FOR LINE INSTALLATION AND NO SEPARATE PAYMENT WILL BE MADE FOR SUCH EXTRA COVER. ALL SUCH LOCATIONS ARE SHOWN ON THE PLANS.

AIR RELEASE VALVE AND AIR VACUUM VALVE LOCATIONS SHOWN ON THE PLANS ARE GENERAL. THE EXACT LOCATIONS SHOULD BE AT THE LOCAL HIGH ELEVATION IN THE VICINITY OF THE ARV OR AVV SHOWN ON THE PLANS.

WATER AND SEWER SEPARATION REQUIREMENT

WATER AND SEWER PARALLEL CONSTRUCTION
ALL WATER AND SEWER FACILITIES SHALL BE SEPARATED BY A MINIMUM OF 10 FEET MEASURED AS THE SHORTEST DISTANCE BETWEEN CLOSEST POINTS. NO WATER MAIN MAY BE CONSTRUCTED WITHIN 10 FT OF A SEWER MAIN, FORCE MAIN, MANHOLE OR ANY OTHER APPURTENANCE EXCEPT FOR CROSSINGS SHOWN ON THE PLANS. CROSSING SHALL MEET THE FOLLOWING REQUIIREMENT.

WATER AND SEWER CROSSING
SEWERS CROSSING WATER MAINS SHALL BE LAID TO PROVIDE A MINIMUM VERTICAL DISTANCE OF 18 INCHES BETWEEN THE OUTSIDE OF THE WATER MAIN AND THE OUTSIDE OF THE SEWER. THIS SHALL BE THE CASE WHERE THE WATER MAIN IS EITHER ABOVE OR BELOW THE SEWER. THE CROSSING SHALL BE ARRANGED SO THAT THE SEWER JOINTS WILL BE EQUIDISTANT AND AS FAR AS POSSIBLE FROM THE WATER MAIN JOINTS. WHERE A WATER MAIN CROSSES UNDER A SEWER, ADEQUATE STRUCTURAL SUPPORT SHALL BE PROVIDED FOR THE SEWER TO MAINTAIN LINE AND GRADE.

WHEN IT IS IMPOSSIBLE TO OBTAIN PROPER HORIZONTAL AND VERTICAL SEPARATION AS STIPULATED ABOVE, ONE OF THE FOLLOWING METHODS SHALL BE REQUIRED:
A. THE SEWER SHALL BE DESIGNED AND CONSTRUCTED EQUAL TO WATER PIPE,
B. EITHER THE WATER MAIN OR THE SEWER LINE MAY BE ENCASED IN A WATERTIGHT CARRIER PIPE THAT EXTENDS 10 FEET ON BOTH SIDES OF THE CROSSING, MEASURED PERPENDICULAR TO THE WATER MAIN. THE CARRIER PIPE SHALL BE MADE OF MATERIALS APPROVED BY THE REGULATORY AGENCY FOR USE IN WATER MAIN CONSTRUCTION.

STREAM CROSSING REQUIREMENTS

THE CONTRACTOR SHALL CONSTRUCT STREAM CROSSINGS IN ACCORDANCE WITH THE PLANS, SPECIFICATION AND THE FOLLOWING CONSTRAINTS:
(1) DURING THE CONSTRUCTION OF THE CROSSING, NO MATERIAL MAY BE PLACED IN THE STREAM OR IN THE FLOOD PLAIN OF THE STREAM TO FORM CONSTRUCTION PADS, COFFER DAMS, ACCESS ROADS, ETC.,
(2) THE TRENCH SHALL BE BACKFILLED AS CLOSELY AS POSSIBLE TO THE ORIGINAL CONTOUR. ALL EXCESS MATERIAL FROM CONSTRUCTION OF THE TRENCH SHALL BE DISPOSED OF OUTSIDE OF THE FLOOD PLAIN.
(3) FOR SUBFLUVIAL CROSSINGS OF ERODIBLE CHANNELS, THERE SHALL BE AT LEAST THIRTY (30) INCHES CLEAR TO THE TOP OF THE PIPE OR CONDUIT AT ALL POINTS.
(4) FOR SUBFLUVIAL CROSSINGS OF NONERODIBLE CHANNELS, THERE SHALL BE AT LEAST SIX (6) INCHES OF CLEAR COVER ABOVE THE TOP OF THE PIPE OR CONDUIT AT ALL POINTS, AND THE PIPE OR CONDUIT SHALL BE ENCASED ON ALL SIDES BY AT LEAST SIX (6) INCHES OF CONCRETE.

GENERAL NOTES

1. WHERE OFFSETS ARE NOTED UNLESS OTHERWISE STATED OR SHOWN, THEY ARE WITH RESPECT TO THE CENTERLINE OF THE HIGHWAY, ROAD, OR STREET, EDGE OF PAVEMENT, FENCELINE, ETC., ALONG WHICH THE WATERLINE TRAVERSES.
2. BEFORE CONSTRUCTION BEGINS NEAR OR THROUGH EXISTING UTILITIES (i.e. GAS CO., TELEPHONE CO., CABLE CO., ETC.) EACH UTILITY COMPANY SHALL BE NOTIFIED. A REQUEST FOR THE EXACT LOCATION OF THE UTILITY SHALL BE MADE, AND PERMISSION TO PROCEED WITH CONSTRUCTION OBTAINED.
3. BEFORE CONSTRUCTION BEGINS THROUGH ANY PROPERTY, THE CONTRACTOR SHALL MAKE HIMSELF AWARE OF THE EXACT LOCATION OF CONSTRUCTION THROUGH THE PROPERTY AND THE BOUNDS OF THE PERMANENT AND TEMPORARY CONSTRUCTION EASEMENTS.
4. PIPE JOINT DEFLECTION IS NOT TO EXCEED MANUFACTURER'S ALLOWABLE LIMITS.
5. AT SOME LOCATIONS, THE CONTRACTOR MAY BE REQUIRED TO PROVIDE EXTRA COVER OVER LINE. COST OF EXTRA COVER IS TO BE INCLUDED IN UNIT PRICE BID FOR LINE INSTALLATION AND NO SEPARATE PAYMENT WILL BE MADE FOR SUCH EXTRA COVER. ALL SUCH LOCATIONS ARE SHOWN ON THE PLANS.
6. CONNECTING NEW LINES TO EXISTING LINES OR TO WORK IN THEIR CONTRACTS IS SUBSIDIARY TO THE CONTRACT. IT INCLUDES FITTINGS, SLEEVES, ETC., BUT DOES NOT INCLUDE GATE VALVES, WHICH ARE EXTRA PAY ITEM.
7. AIR RELEASE VALVE AND AIR VACUUM VALVE LOCATIONS SHOWN ON THE PLANS ARE GENERAL. THE EXACT LOCATIONS SHOULD BE AT THE LOCAL HIGH ELEVATION IN THE VICINITY OF THE ARV OR AVV SHOWN ON THE PLANS.
8. ALL STREAM AND RIVER CROSSINGS GREATER THAN 15 FEET WIDE SHALL HAVE GATE VALVES INSTALLED ON EACH SIDE OF THE CROSSING. THE VALVE ON THE SOURCE SIDE SHALL HAVE A BY-PASS SERVICE METER INSTALLED FOR LEAK DETECTION.
9. ALL WATER LINES WITHIN 200 FEET RADIUS OF UNDERGROUND STORAGE TANKS (KRS-224.6-100), PETROLEUM STORAGE TANKS (KRS-224.60-115) AND ASSOCIATED PUMPS AND LINES SHALL BE DUCTILE IRON PIE WITH PETROLEUM RESISTANT JOINTS AND ALL SERVICE LINE SHALL BE COPPER.

UTILITY NOTES

UTILITY PROVIDERS

WATER:
MONTICELLO UTILITY COMMISSION
SCOTT UPCHURCH, MANAGER
1040 N. MAIN ST., MONTICELLO, KY 42633
606-348-8473

SEWER:
MONTICELLO UTILITY COMISSION
SCOTT UPCHURCH, MANAGER
1040 N. MAIN ST., MONTICELLO, KY 42633

2. CONTRACTOR SHALL NOTIFY APPROPRIATE UTILITY AT LEAST 48 HOURS PRIOR TO BEGINNING CONSTRUCTION IN THE AREA OF THE AFFECTED UTILITY.
3. ANY INTERRUPTIONS IN SERVICE MUST BE MINIMIZED AND SCHEDULED WITH THE UTILITY.
4. ALL CASINGS FOR FUTURE USE MUST BE SEALED AND MARKED AT EACH END WITH A STEEL POST MIN. 6' LENGTH.
5. ALL PIPE MATERIALS, FITTINGS, ETC. MUST MEET THE APPROVAL OF THE APPLICABLE UTILITY.

Know what's below. Call before you dig. 811

GENERAL NOTES

STATE OF KENTUCKY
GLENDON ALLEN ROSS 8242
LICENSED PROFESSIONAL ENGINEER

WAYNE COUNTY INDUSTRIAL PARK
UTILITY EXTENSIONS
WAYNE COUNTY, KENTUCKY

DATE	REVISION	BY

Design Documents:
The design professional waves any and all responsibility and liability for problems which arise from failure to follow these plans, specifications and the design intent they convey.
Copyright ©
This document discloses subject matter considered confidential by mse of kentucky, inc. and on which mse of kentucky, inc. has property rights, neither receipt nor possession thereof confers or transfer any rights to reproduce the document or any part thereof, or to disclose any information contained therein to others, or to use it for any purpose without the written permission of mse of kentucky, inc.

PROJECT NO.	2077-04
DESIGNED BY:	G.A.R.
DRAWN BY:	J.D.W.
CHECKED BY:	G.A.R.
REVIEWED BY:	G.A.R.
DATE:	JUNE 2023
SCALE:	AS SHOWN

mse OF KENTUCKY, INC.
Engineers Architects Planners
624 Wellington Way
Lexington, Ky. 40503
www.mselex.com
Phone: (859)223-5694
Fax: (859)223-2607

DRAWING NO.
GND
SHEET OF

M:\PROJECTS\PARADISE PARK WATER AND SEWER EXTENSIONS\WORKING\DETAILS\PARADISE PARK WATER AND SEWER DETAILS-6-22-23.DWG

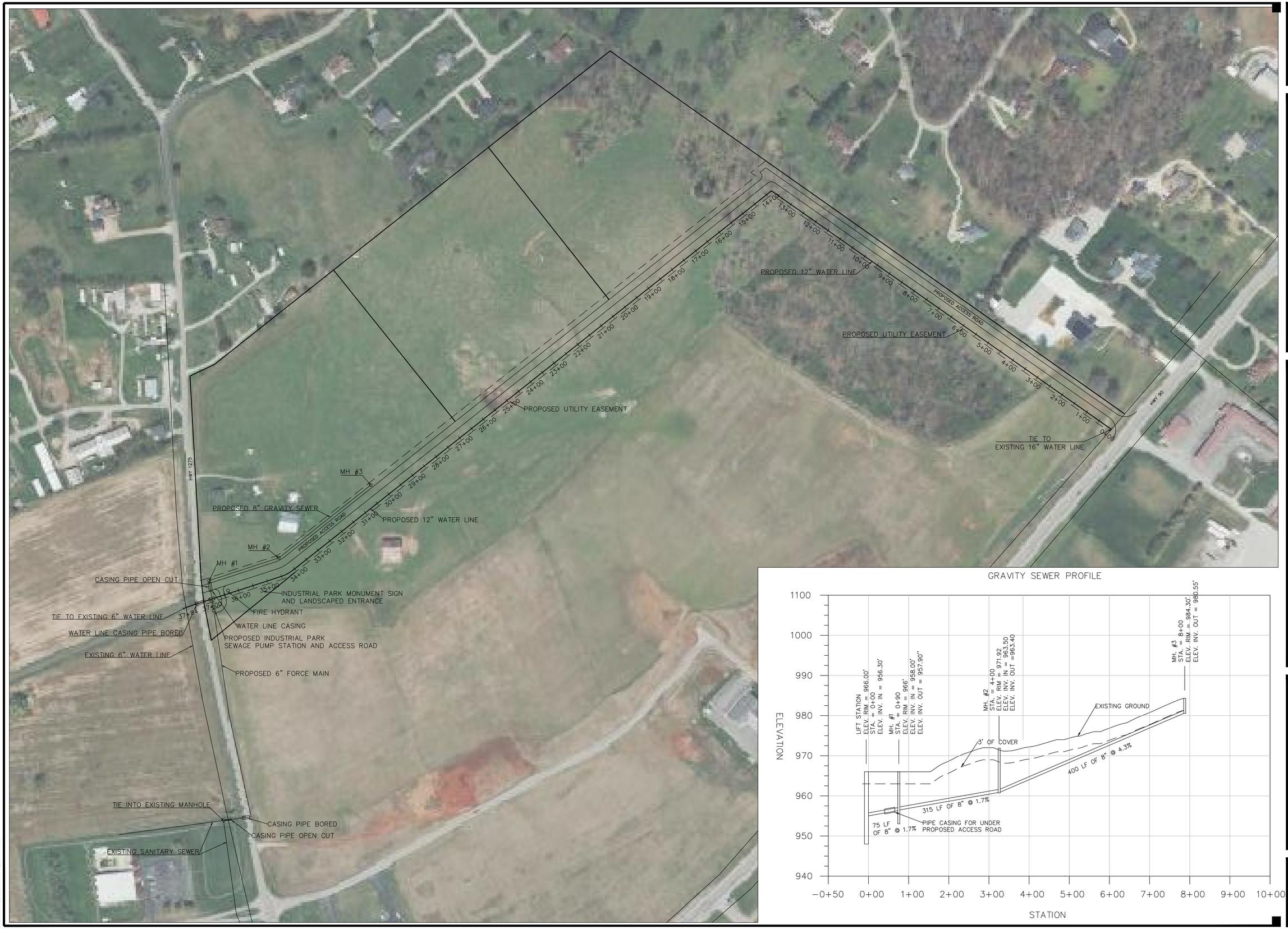

STATE OF KENTUCKY
GLENDON ALLEN ROSS
8242
LICENSED PROFESSIONAL ENGINEER

UTILITY EXTENSIONS TO EXISTING BUILD READY PAD

SEWER LIFT STATION

WAYNE COUNTY INDUSTRIAL PARK
WAYNE COUNTY, KENTUCKY

DATE	REVISION	BY

PROJECT NO.	2041-08
DESIGNED BY	MSE
DRAWN BY	MSE
CHECKED BY	DST
REVIEWED BY	GAR
DATE	MARCH, 1 2024
SCALE	1"=133'

MSE OF KENTUCKY, INC.
Engineers
Architects
Planners
624 Wellington Way
Lexington, KY 40503
www.mselex.com
Phone: (859)223-5694
Fax: (859)223-2607

DRAWING NO.
C-1

SHEET 5 OF 11

STATE OF KENTUCKY
GLENDON ALLEN ROSS
8242
LICENSED
PROFESSIONAL ENGINEER

UTILITY EXTENSIONS TO EXISTING BUILD READY PAD

SEWER LIFT STATION

WAYNE COUNTY INDUSTRIAL PARK
WAYNE COUNTY, KENTUCKY

DATE	REVISION	BY

PROJECT NO.	2041-08
DESIGNED BY	MSE
DRAWN BY	MSE
CHECKED BY	DST
REVIEWED BY	GAR
DATE	MARCH, 1 2024
SCALE	1"=56'

MSE OF KENTUCKY, INC.
Engineers
Architects
Planners
624 Wellington Way
Lexington, KY 40503
www.mselex.com
Phone: (859)223-5694
Fax: (859)223-2607

DRAWING NO.
C-2

SHEET 5 OF 11

STATE OF KENTUCKY
GLENDON ALLEN ROSS
8242
LICENSED
PROFESSIONAL ENGINEER

UTILITY EXTENSIONS TO EXISTING BUILD READY PAD

SEWER LIFT STATION

WAYNE COUNTY INDUSTRIAL PARK
WAYNE COUNTY, KENTUCKY

DATE	REVISION	BY

PROJECT NO.	2041-08
DESIGNED BY	MSE
DRAWN BY	MSE
CHECKED BY	DST
REVIEWED BY	GAR
DATE	MARCH, 1 2024
SCALE	1"=57'

MSE OF KENTUCKY, INC.
Engineers
Architects
Planners
624 Wellington Way
Lexington, KY 40503
www.mselex.com
Phone: (859)223-5694
Fax: (859)223-2607

DRAWING NO.
C-3

SHEET 5 OF 11

STATE OF KENTUCKY
GLENDON ALLEN ROSS
8242
LICENSED PROFESSIONAL ENGINEER

UTILITY EXTENSIONS TO EXISTING BUILD READY PAD

WATER LINE

WAYNE COUNTY INDUSTRIAL PARK
WAYNE COUNTY, KENTUCKY

DATE	REVISION	BY

PROJECT NO.	2041-08
DESIGNED BY	MSE
DRAWN BY	MSE
CHECKED BY	DST
REVIEWED BY	GAR
DATE	MARCH, 1 2024
SCALE	1"=133'

MSE OF KENTUCKY, INC.
Engineers
Architects
Planners
624 Wellington Way
Lexington, KY 40503
www.mselex.com
Phone: (859)223-5694
Fax: (859)223-2607

DRAWING NO.

C-4

SHEET 5 OF 11

PUMP SCHEDULE

GPM	T.D.H.	H.P.	R.P.M.	MINIMUM EFFICIENCY	POWER	TYPE
180	43	25	3500	50%	230/460	SUBMERSIBLE PUMP

NOTE:
STAINLESS STEEL JUNCTION BOX W/ INTEGRAL TERMINAL BOARD FOR PUMP CONNECTIONS AND FLOAT CONNECTIONS SHALL BE MOUNTED ON THE WETWELL. A STAINLESS STEEL CONTROL PANEL SHALL BE MOUNTED ON THE VALVE VAULT. PEDESTALS OF JUNCTION BOX AND VALVE VAULT SHALL BE OF STAINLESS STEEL WITH ADEQUATE ROOM FOR ALL CABLES AND CONNECTORS. PEDESTALS SHALL HAVE AN ACCESS PANEL SIZED TO ALLOW AMPLE ACCESS TO ALL CABLE CONNECTORS. "DO NOT PAINT."

NOTE:
ALL FASTENERS INCLUDING BOLTS, NUTS, OTHER METALS (EXCEPT PIPE), IN/ON WET WELL & VALVE VAULT TO BE STAINLESS STEEL.

Control Point	Elevation (Ft MSL)	Volume (Gallons)	Fill Time (Minutes)
Bottom	943.00		
		565	3.2
Pumps Off	949.50		
		565	3.2
Lead	951.00		
		376	2.1
Lag	952.00		
		376	2.1
Alarm	953.00		
		6956	38.9
Top of Wet Well	966.50		

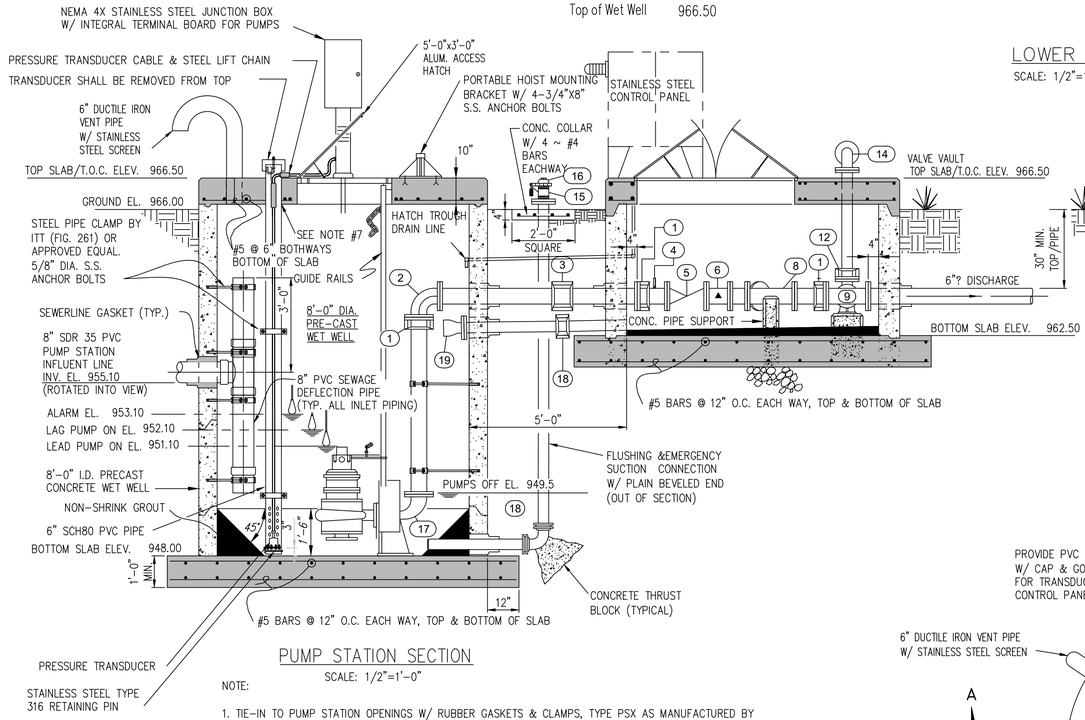

PUMP STATION SECTION

SCALE: 1/2"=1'-0"

NOTE:

1. TIE-IN TO PUMP STATION OPENINGS W/ RUBBER GASKETS & CLAMPS, TYPE PSX AS MANUFACTURED BY PRESS SEAL GASKET CO. OR EQUAL. PACK GASKET WITH NON-SHRINK GROUT & FINISH SUCH THAT GROUT IS FLUSH WITH INSIDE WALL OF WET WELL & VALVE VAULT. TYPICAL ALL OPENINGS.

2. CONTRACTOR SHALL CONFIRM ANGLE OF PIPE ENTRANCE TO PUMP STATION BEFORE ORDERING WET WELL SECTIONS.

3. LOCATE GUIDE RAILS, UPPER GUIDE BRACKET, CABLE HOLDER & ALUM. ACCESS HATCH AS REQUIRED BY PUMPS & EQUIPMENT DIMENSIONS.

4. COAT OUTSIDE OF WET WELL AND VALVE VAULT WITH BITUMINOUS WATER PROOFING AS PER MANHOLE STANDARD DETAIL. TWO BANDS OF CONSEAL ARE TO BE USED @ JOINTS AND JOINTS ARE TO BE GROUTED.

5. ALL PIPING SHOWN IN AND BETWEEN THE WET WELL AND VALVE VAULT ARE TO BE DUCTILE IRON PIPES, UNLESS SHOWN OTHERWISE.

6. PUMP STATION AND VALVE VAULT SHALL BE EQUIPED W/ APPROVED FLYGT SAFE-HATCH ACCESS COVER FOR FALL PROTECTION AS MANUFACTURED BY XYLEM OR APPROVED EQUAL.

7. CORE DRILL & GROUT THE TRANSDUCER STILLING WELL PENETRATION, OR SLEEVE & SEAL W/ SEALANT.

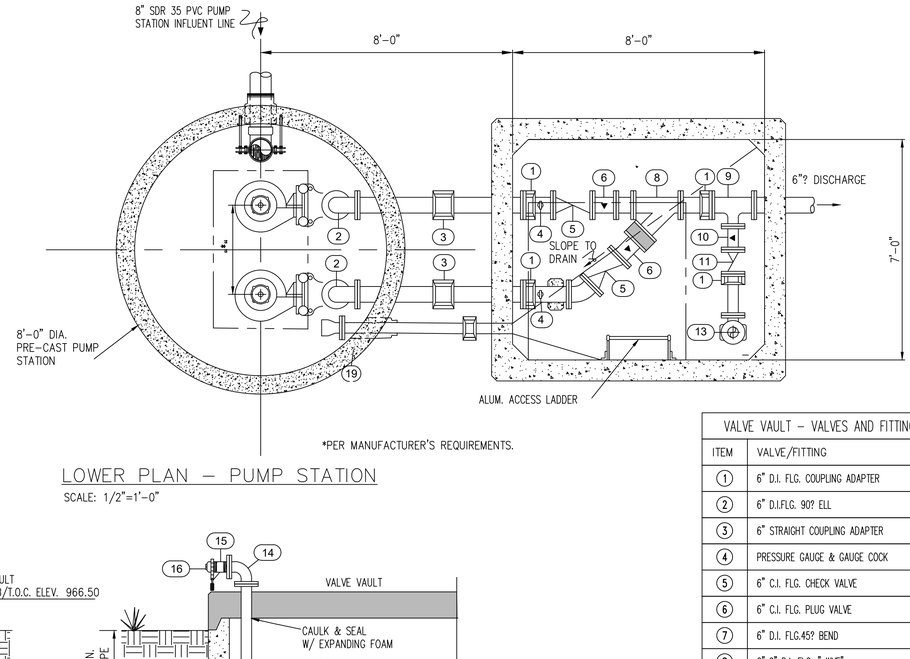

*PER MANUFACTURER'S REQUIREMENTS.

LOWER PLAN - PUMP STATION

SCALE: 1/2"=1'-0"

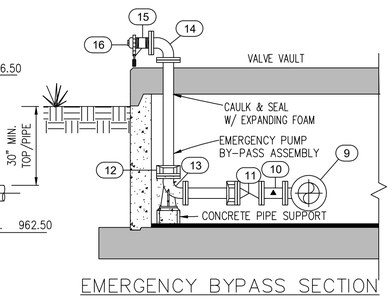

EMERGENCY BYPASS SECTION

N.T.S.

NOTE:
ALUM. ACCESS HATCH AND PORTABLE HOIST MOUNTING BRACKET, FOR PUMP REMOVABLE, SHALL BE LOCATED PER PUMP MANUFACTURE'S RECOMMENDATIONS.

VALVE VAULT - VALVES AND FITTING SUMMARY	
ITEM	VALVE/FITTING
1	6" D.I. FLG. COUPLING ADAPTER
2	6" D.I.FLG. 90? ELL
3	6" STRAIGHT COUPLING ADAPTER
4	PRESSURE GAUGE & GAUGE COCK
5	6" C.I. FLG. CHECK VALVE
6	6" C.I. FLG. PLUG VALVE
7	6" D.I. FLG.45? BEND
8	6"x6" D.I. FLG. " WYE"
9	6"x6"x4" D.I. FLG. " TEE"
10	4" C.I. FLG. PLUG VALVE
11	4" C.I. FLG. CHECK VALVE
12	4" D.I. FLG. COUPLING ADAPTER
13	4" D.I. FLG. BASE ELL
14	4" D.I. FLG. 90? ELL
15	4" COMPANION FLANGE
16	4"~"QUICK-CONNECT" FITTING W/ CAP
17	D.I. FLG. ECCENTRIC REDUCER (AS REQUIRED BY PUMP MANUFACTURE)
18	4" STRAIGHT COUPLING ADAPTER
19	4" FLANGED CHECK VALVE BY TIDEFLEX "SERIES 35" OR EQUAL
20	4" D.I.M.J. 90? ELL

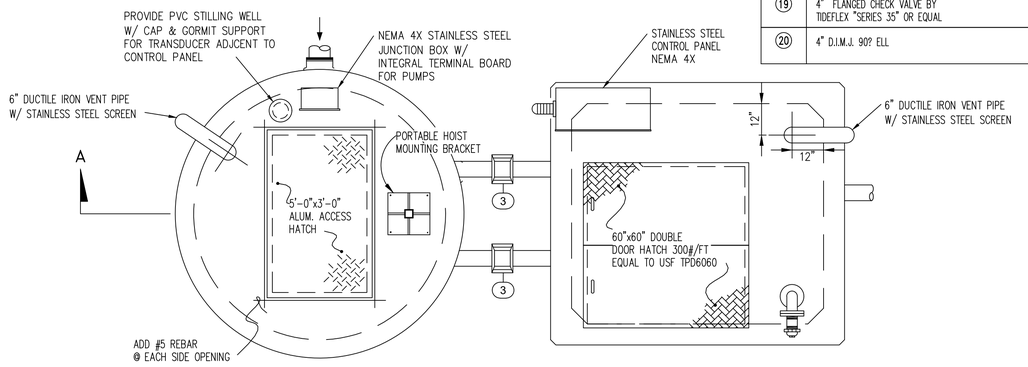

UPPER PLAN - PUMP STATION

SCALE: 1/2"=1'-0"

PLAN & DETAILS - PUMP STATION

GLENDON ALLEN ROSS 8242 LICENSED PROFESSIONAL ENGINEER
STATE OF KENTUCKY

UTILITY EXTENSIONS TO EXISTING BUILD READY PAD

SEWER LIFT STATION

WAYNE COUNTY INDUSTRIAL PARK
WAYNE COUNTY, KENTUCKY

DATE	REVISION	BY
- - -	-	

COPYRIGHT
NOTICE: THE DRAWINGS, SPECIFICATIONS AND OTHER DOCUMENTS PREPARED BY MSE ENGINEERS ARE INSTRUMENTS OF SERVICE FOR USE SOLELY WITH RESPECT TO THIS PROJECT. ALL REPRODUCTIONS OF THESE INSTRUMENTS OF SERVICE, IN WHOLE OR IN PART, ARE FORBIDDEN AND SHALL NOT BE USED BY ANY PERSON OTHER THAN MSE ENGINEERS WITHOUT THE EXPRESS WRITTEN CONSENT OF MSE ENGINEERS. ANY SUCH UNAUTHORIZED REPRODUCTION OR USE SHALL BE AT THE SOLE RISK OF THE USER AND WITHOUT LIABILITY TO MSE ENGINEERS. ANY SUCH USE SHALL BE CONSTRUED TO BE UNDER THE LAWS OF THE COMMONWEALTH OF KENTUCKY.

PROJECT NO.	2041-08
DESIGNED BY	MSE
DRAWN BY	MSE
CHECKED BY	DST
REVIEWED BY	CAR
DATE	MARCH, 1 2024
SCALE	AS NOTED

MSE ENGINEERS OF KENTUCKY, INC.
Engineers Architects Planners
624 Wellington Way Lexington, KY 40503
www.mselex.com
Phone: (859)223-5694 Fax: (859)223-2607

DRAWING NO.

PS-1

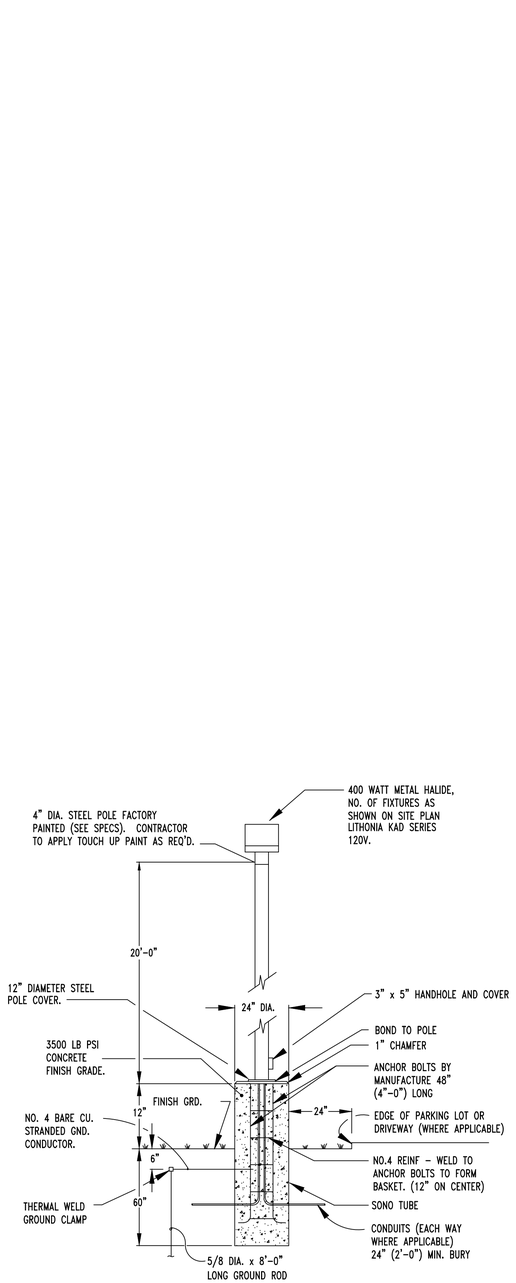

LIGHT POLE DETAIL - OLF-1

NO SCALE

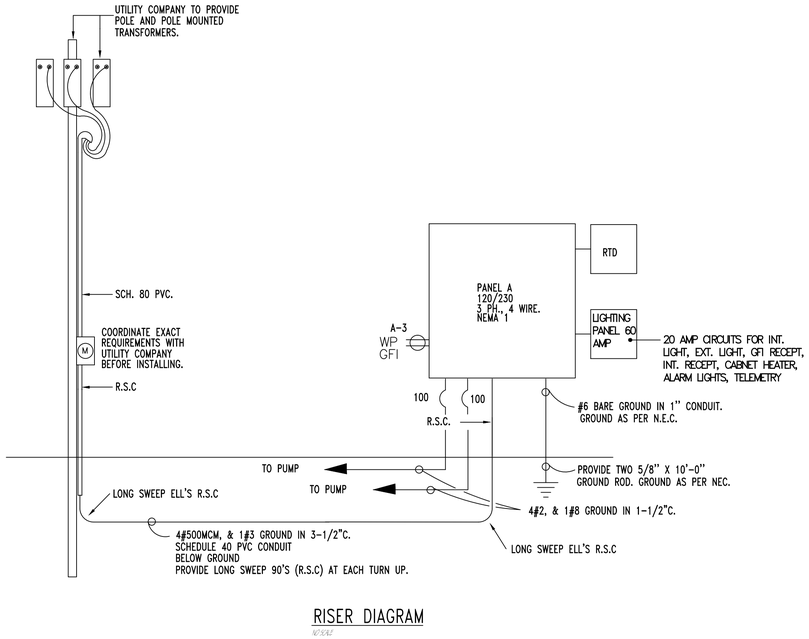

RISER DIAGRAM

NO SCALE

ELECTRICAL RISER DIAGRAM - PUMP STATION

NO SCALE

GLENDON ALLEN ROSS
8242
LICENSED PROFESSIONAL ENGINEER
STATE OF KENTUCKY

UTILITY EXTENSIONS TO EXISTING BUILD READY PAD

LIFT STATION - ELECTRICAL

WAYNE COUNTY INDUSTRIAL PARK
WAYNE COUNTY, KENTUCKY

DATE	BY	REVISION
- - - -	-	-

© 2023 The drawings and/or plans created, published, or filed in accordance with KRS 365.015(7), as well as any and all KRS 365.015(7) "Electronic Documents" (together with all text, geometric and graphic information, and any and all embedded data) are the property of MSE of Kentucky, Inc. and are protected by all applicable copyright laws. Any unauthorized use, reproduction, or transfer of these documents, or any of the information contained therein, is prohibited without the express written consent of MSE of Kentucky, Inc.

PROJECT NO.	2041-08
DESIGNED BY	MSE
DRAWN BY	MSE
CHECKED BY	DST
REVIEWED BY	GAR
DATE	MARCH, 1 2024
SCALE	AS NOTED

Engineers
Architects
Planners
MSE OF KENTUCKY, INC.
624 Wellington Way
Lexington, KY 40503
Phone: (859)223-5694
Fax: (859)223-2607
www.mselex.com

DRAWING NO.

E-1

SHEET 7 OF 11

ELECTRICAL DETAILS

SOFT SANDY CLAY SOIL (BEARING STRENGTH = 2,000 #/FT.²)											
PIPE SIZE	BEARING AREA 90° BEND		"B"	"A"	BEARING AREA 45° BEND		"B"	"A"	BEARING AREA TEE, GATE VALVE & DEAD END		"B"	"A"
1 1/2"	0.33	FT.²	12"	4"	0.18	FT.²	8"	4"	0.24	FT.²	9"	4"
2"	0.52	FT.²	12"	7"	0.28	FT.²	12"	4"	0.37	FT.²	12"	5"
2 1/2"	0.75	FT.²	12"	9"	0.41	FT.²	12"	5"	0.55	FT.²	12"	7"
3"	1.12	FT.²	18"	9"	0.61	FT.²	12"	8"	0.79	FT.²	18"	7"
4"	1.84	FT.²	24"	12"	1.00	FT.²	18"	8"	1.30	FT.²	24"	8"
6"	3.96	FT.²	36"	16"	2.14	FT.²	28"	12"	2.80	FT.²	30"	14"
8"	6.70	FT.²	54"	18"	3.65	FT.²	30"	18"	4.74	FT.²	36"	19"
10"	10.00	FT.²	60"	24"	5.41	FT.²	44"	18"	7.07	FT.²	45"	24"
12"	13.69	FT.²	60"	35"	7.41	FT.²	36"	30"	9.68	FT.²	47"	30"
14"	16.36	FT.²	66"	36"	9.55	FT.²	40"	34"	12.20	FT.²	60"	30"
16"	19.55	FT.²	72"	40"	11.35	FT.²	60"	28"	14.77	FT.²	60"	36"

THRUST BLOCKS
(160 P.S.I. DESIGNED)

NOTE: UNDER ROAD CROSSINGS STEEL CASING PIPE SHALL BE REQUIRED. PIPES 4" & LESS SHALL BE NEW SCHEDULE 40, PIPES LARGER THAN 4" SHALL HAVE MINIMUM WALL THICKNESS OF 0.280". ALL BORES & JACKED ENCASEMENT PIPE SHALL BE INSTALLED WITHOUT HOLES NOT LARGER THAN THE OUTSIDE DIAMETER OF THE ENCASEMENT PIPE.

NOTE: ALL JOINTS TO BE SOLDER YIELDED, END OF CASING TO BE SEALED W/ CONCRETE. WHERE LINE HAS BEEN INSTALLED & TESTED.

* NOTE: OPEN TRENCH NO CLOSER THAN ONE FOOT FROM THE EDGE OF PAVEMENT.

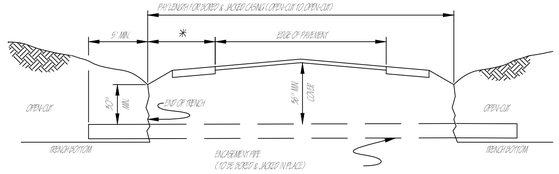

SECTION VIEW OF ROAD CROSSING
N.T.S.

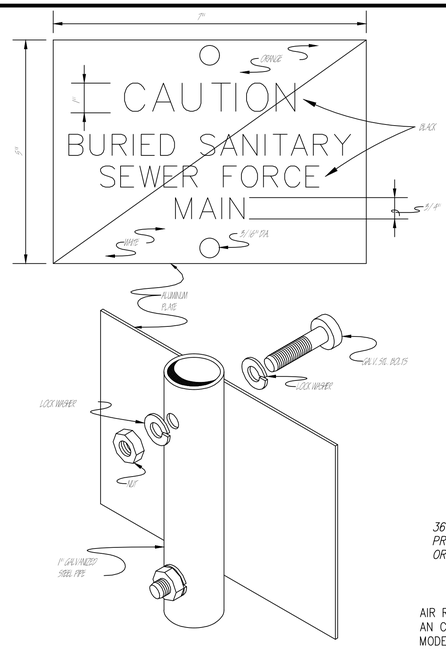

FORCE MAIN MARKER
N.T.S.

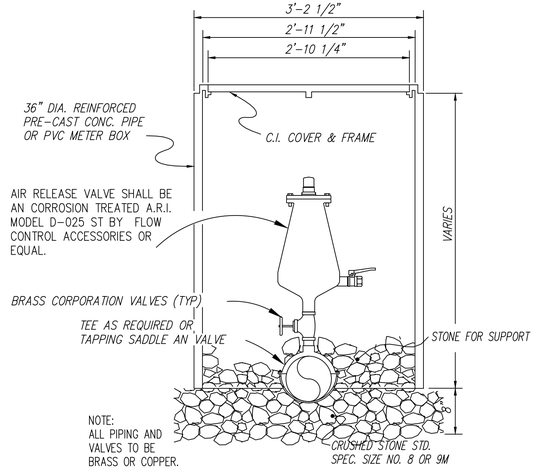

AIR RELEASE AND VACUUM RELEASE VALVE AND BOX DETAIL
N.T.S.

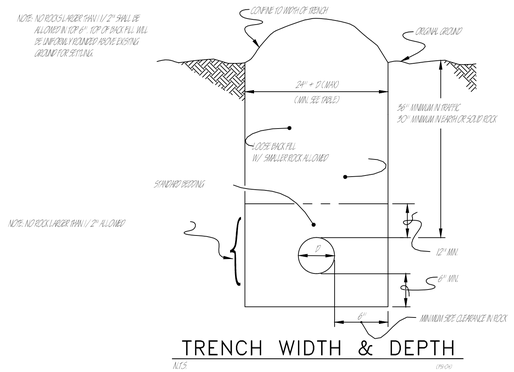

TRENCH WIDTH & DEPTH
N.T.S.

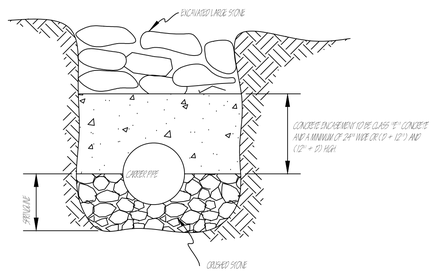

SPECIAL CREEK CROSSING TYPE "B" IN LOSE ROCK
N.T.S.

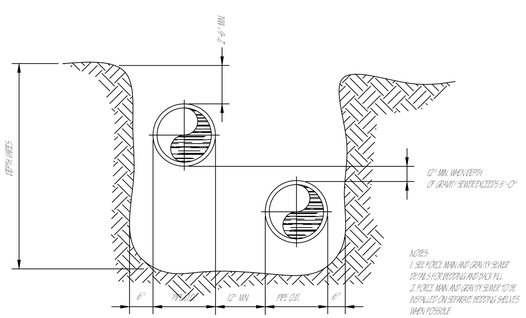

COMBINED TRENCH
N.T.S.

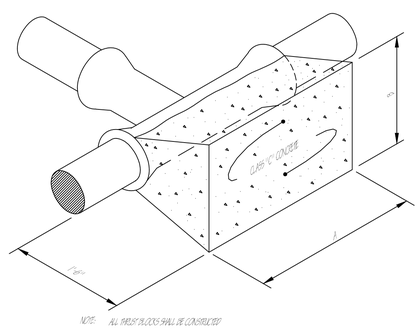

THRUST BLOCK FOR TEE
N.T.S.

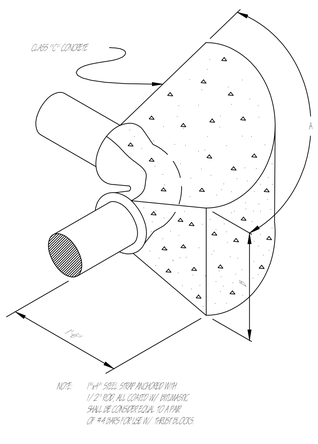

THRUST BLOCK FOR HORIZONTAL 90° BEND
N.T.S.

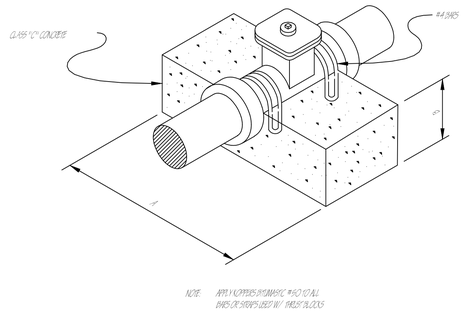

THRUST BLOCK FOR GATE VALVE
N.T.S.

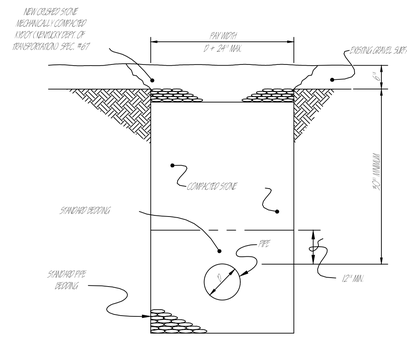

GRAVEL SURFACE
N.T.S.

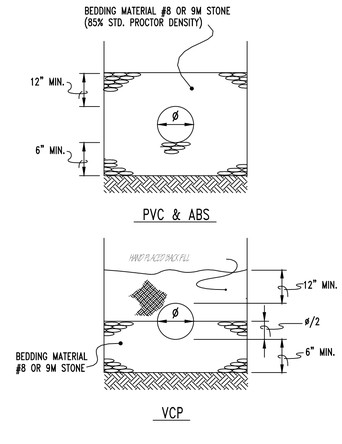

TRENCHING, BEDDING, & BACK FILL DETAILS
N.T.S.

STANDARD SEWER DETAILS

STATE OF KENTUCKY
GLENDON ALLEN ROSS
8242
LICENSED PROFESSIONAL ENGINEER

DATE	REVISION	BY

© COPYRIGHT
NOTICE: The material shown, described, and represented graphically on this drawing is copyrighted and is the property of MSE of Kentucky, Inc. It is not to be used in any way without the written permission of MSE of Kentucky, Inc. Any unauthorized use will be prosecuted to the full extent of the law.

PROJECT NO.	2041-08
FILE NAME	
DESIGNED BY	MSE
DRAWN BY	MSE
CHECKED BY	DST
REVIEWED BY	GAR
DATE	MARCH, 1 2024
SCALE	AS SHOWN

Engineers
Architects
Planners
MSE OF KENTUCKY, INC.
624 Wellington Way
Lexington, KY 40503
www.msekec.com
PHONE: (859)223-5694
FAX: (859)223-2607

DRAWING NO.

SD-1

SHEET 8 OF 11

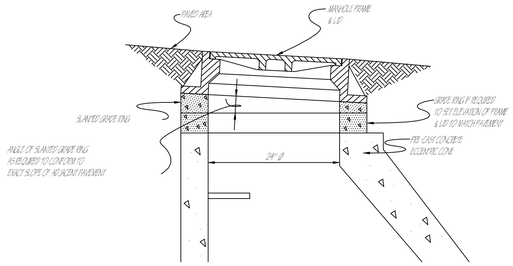

NOTE: INSTALL SEALING COMPOUND IN ALL JOINTS TO INCLUDE BETWEEN FRAME.

DETAIL – GRADE RINGS

N.T.S. (GS-01)

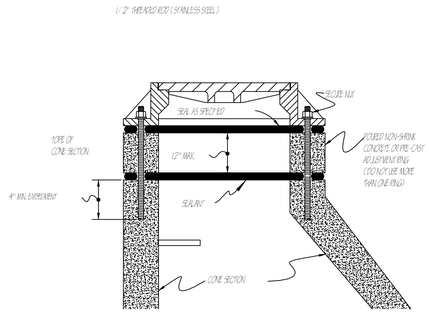

DETAIL: SANITARY SEWER INSTALLATION DETAIL FOR ALL FRAMES AND COVERS

N.T.S.

NOTE:
MIN. WT. LID = 160 lbs.
MIN. WT. LID / FRAME ASSY. = 535 lbs.
ALL STEEL ASSY.A-48 W/ MACHINED BEARING SURFACES

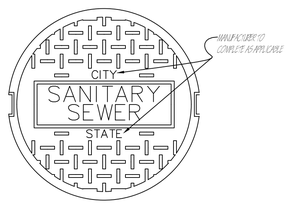

PLAN – LID

N.T.S.

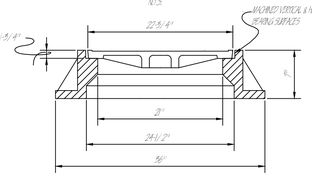

SECTION – MANHOLE & LID

N.T.S. (GS-01)

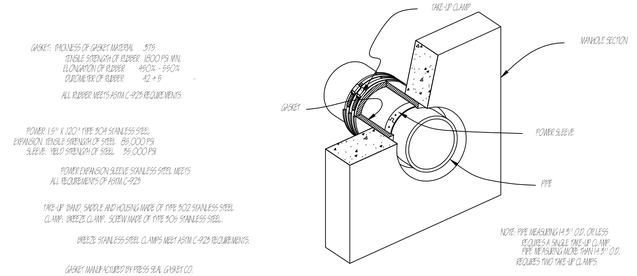

GASKET: THICKNESS OF GASKET MATERIAL .375
TENSILE STRENGTH OF RUBBER 1800 PSI MIN.
ELONGATION OF RUBBER 450% - 550%
DURometer OF RUBBER 42° ± 5
ALL RUBBER MEETS ASTM C-923 REQUIREMENTS

POWER 1.5" X .120" TYPE 304 STAINLESS STEEL
EXPANSION TENSILE STRENGTH OF STEEL 85,000 PSI
SLEEVE YIELD STRENGTH OF STEEL 35,000 PSI

POWER EXPANSION SLEEVE STAINLESS STEEL MEETS ALL REQUIREMENTS OF ASTM C-923

TAKE-UP BAND, SADDLE AND HOUSING MADE OF TYPE 302 STAINLESS STEEL
CLAMP, SHEETS CLAMP, SCREW MADE OF TYPE 304 STAINLESS STEEL.

BRIDGE STAINLESS STEEL CLAMPS MEET ASTM C-923 REQUIREMENTS

GASKET MANUFACTURED BY PRESS SEAL GASKET CO.

NOTE: PIPE MEASURING 14.5" O.D. OR LESS REQUIRES A SINGLE TAKE-UP CLAMP. PIPE MEASURING MORE THAN 14.5" O.D. REQUIRES TWO TAKE-UP CLAMPS.

FORCE MAIN/MANHOLE TIE-IN

N.T.S. (GS-01)

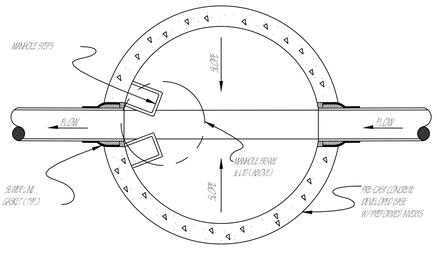

PLAN

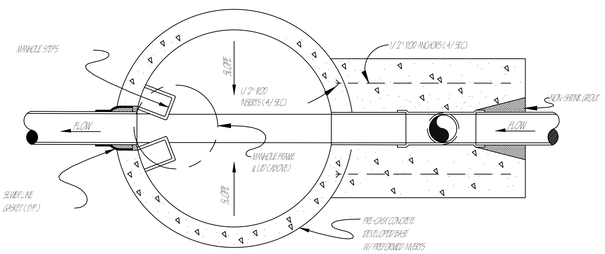

PLAN

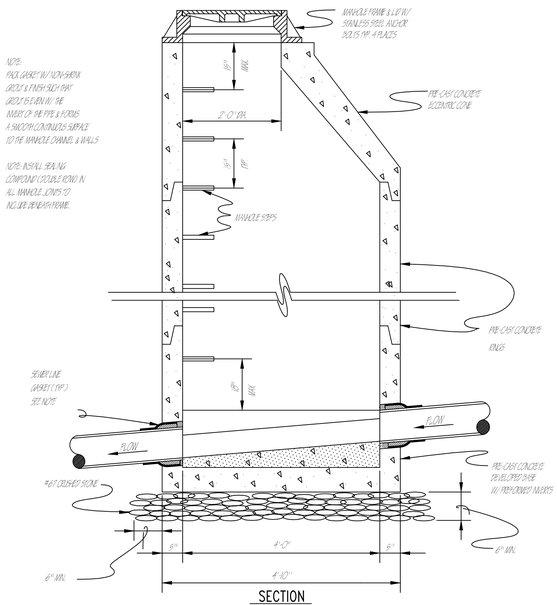

SECTION

TYPICAL MANHOLE

N.T.S. (GS-01)

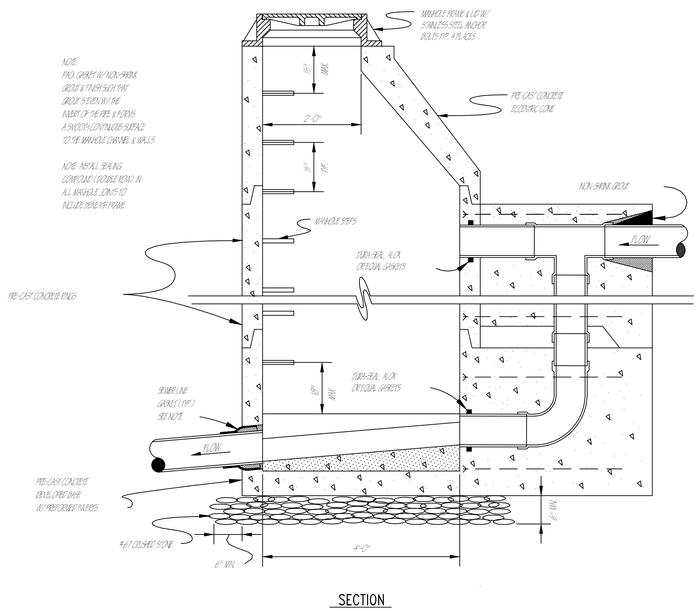

SECTION

TYPICAL DROP-MANHOLE

N.T.S. (GS-01)

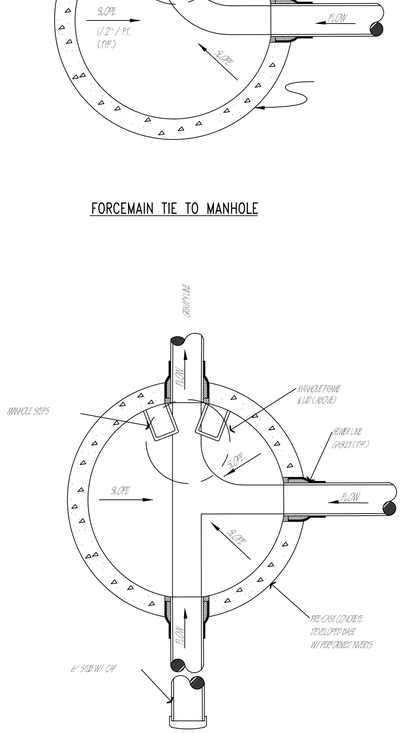

FORCEMAIN TIE TO MANHOLE

FORCEMAIN TIE TO MANHOLE

STANDARD SEWER DETAILS

NO.	DATE	REVISION	BY

COPYRIGHT
2023. The property rights to this plan, design, concept, and drawing are NOT ASSIGNED to any of the governmental agencies using this drawing. Further, the undersigned reserves its common law copyright and other property rights in these plans, design, concept, and drawing. These plans, design, concept, and drawing are not to be changed or copied in any form or manner whatsoever nor are they to be assigned to any third party without first obtaining the express written permission and consent of the undersigned.

PROJECT NO.	2041-08
FILE NAME	
DESIGNED BY	MSE
DRAWN BY	MSE
CHECKED BY	DST
REVIEWED BY	GAR
DATE	MARCH, 1 2024
SCALE	AS SHOWN

Engineers
Architects
Planners
MSE OF KENTUCKY, INC.
624 Wellington Way
Lexington, KY 40503
www.msekc.com
PHONE: (859)223-5694
FAX: (859)223-2607

DRAWING NO.

SD-2

SHEET 9 OF 11

MINIMUM TRENCH WIDTHS IN EARTH & MAXIMUM PAY WIDTHS FOR ROCK EXCAVATION					
SIZE (UP TO 4" PIPE)	WIDTH	SIZE	WIDTH	SIZE	WIDTH
6"	2'-0"	12" PIPE	2'-6"	18" PIPE	3'-0"
8"	2'-0"	14"	2'-6"	20"	3'-2"
8"	2'-0"	15"	2'-8"	21"	3'-4"
10"	2'-4"	16"	2'-8"	24"	3'-8"

NOTE: NO ROCK'S LARGER THAN 1 1/2" SHALL BE ALLOWED IN TOP 6". TOP 9" BACKFILL WILL BE UNIFORMLY ROUNDED ABOVE EXISTING GROUND FOR SETTLING.

NOTE: BACKFILL SHALL BE HAND PLACED BUT MAY BE MECHANICALLY PLACED IF APPROVED BY ENGINEER & SOLIDLY TAMPED BY HAND OR APPROVED MECHANICAL METHODS (MAY BE "WALKED-IN" WITH PVC PIPE) AROUND THE PIPE & TO A POINT 6" HIGHER THAN TOP OF THE PIPE & 12" HIGHER FOR A.C. PIPE. THE REMAINDER OF BACKFIL SHALL CONTAIN NO ROCK'S LARGER THAN 18".

NOTE: NO ROCK LARGER THAN 1/2" ALLOWED

STANDARD BEDDING (SEE STANDARD BEDDING TABLE) FOR PVC PIPE MAY BE COMPACTED IN PLACE BY "WALKING-IN" FINELY GRADED SELECT MATERIAL WHERE TRENCHING EQUIPMENT LEAVES SUITABLE BEDDING. SHOVELING OF ADDITIONAL BEDDING SHALL NOT BE REQUIRED. THE PIPE BARREL SHALL BE UNIFORMLY SUPPORTED FOR ITS FULL LENGHT.

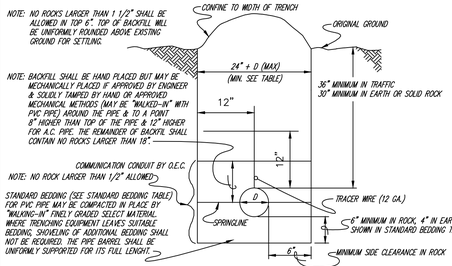

STANDARD TRENCH DETAIL

N.T.S. (NEH-06)

NOTE: AC PIPE CROSSINGS SUBSTITUTE BANK RUN SAND, IF NOT ENCASED, FOR SPEC. #78 STONE. ALL OTHER PIPE MATERIALS USE STONE.

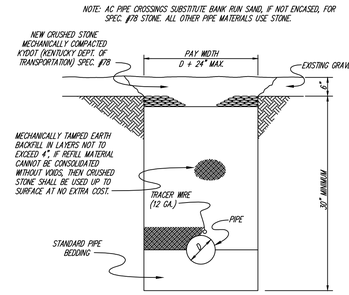

GRAVEL SURFACE

N.T.S. (NEH-01)

SURFACE RESTORATION

(NEH-10)

NOTE: WHERE SEPARATE BID ITEMS ARE ESTABLISHED FOR PAVING REPLACEMENT, QUANTITIES SHALL BE DETERMINED AS FOLLOWS: STONE USED FOR PAVEMENT REPLACEMENT TO BE PAID FOR BY TON FOR WEIGHT OF MATERIAL REQUIRED TO FIT THE DIMENSIONS SHOWN IN THESE DETAILS. UNIT WEIGHT = 110#/SQ.YD. PER INCH OF DEPTH.

BITUMINOUS SURFACING OF ALL TYPES PAID FOR ON THE BASIS OF SQUARE YARDAGE OF 2" THICK PAVING REQUIRED TO FIT DIMENSIONS SHOWN IN THE DETAILS. ADJUST THE ACTUAL DEPTH REQUIRED TO MATCH EXISTING PAVING. CONCRETE SURFACING, EXCEPT DRIVEWAYS & SIDEWALKS, PAID FOR ON BASIS OF SQUARE YARDAGE OF 6" THICK PAVING REQUIRED TO FIT DIMENSIONS SHOWN IN DETAILS. ADJUST TO ACTUAL DEPTH REQUIRED.

NOTE: AC PIPE CROSSINGS SUBSTITUTE BANK RUN SAND, IF NOT ENCASED, FOR SPEC. #78 STONE. ALL OTHER PIPE MATERIALS USE STONE.

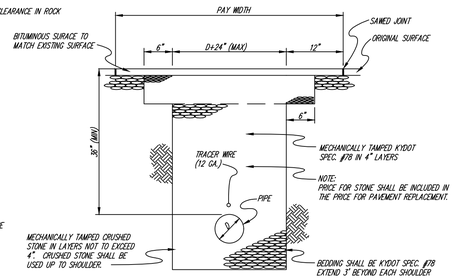

BITUMINOUS LIGHT-DUTY SURFACE 2" OR LESS

N.T.S. (NEH-02)

PIPE	BEDDING (REQ'D NO EXTRA PAYMENT)
PVC (4" AND SMALLER) COPPER, GALVANIZED	EARTH TRENCH BOTTOM (LEVELLED)
PVC (ABOVE 4"), ALL MUNICIPAL PVV	COMPACTED EARTH BACKFILL
C.I. AND D.I. (LESS THAN 4")	COMPACTED EARTH BACKFILL
C.I. AND D.I. (4" DIA. AND ABOVE)	COMPACTED CRUSHED STONE BACKFILL
ASBESTOS-CEMENT (ABOVE 4")	COMPACTED BANK RUN SAND

STANDARD BEDDING TABLE

(NEH-09)

NOTE: BOXES IN GRASS AREAS SHALL BE NO HIGHER THAN 1/2" ABOVE GROUND & NO LONGER THAN FLUSH. BOXES IN CONCRETE OR PAVED AREAS SHALL BE FLUSH. IN AREAS TO BE SODDED, THE TOP OF BOX SHALL BE 2" ABOVE GRADE.

*NOTE: CHECK VALVES TO BE INSTALLED IN METER BOX WITH A SUITABLE METER BOX COVER TO ACCOMODATE VALVE & ACCESSORIES.

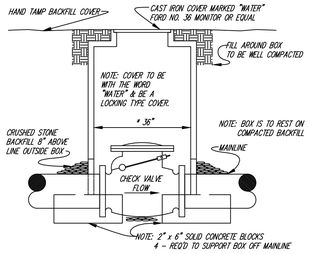

CHECK VALVE SETTING

N.T.S. (NEH-07)

NOTE: FOR BOTH OPPOSITE SIDE & SAME SIDE SERVICES IN HIGH PRESSURE AREA WHERE MAINLINE PIPE EXCEEDS CLASS 160, THE SERVICE LINE SHALL BE CONSTRUCTED OF PIPE OF THE SAME CLASS AS THE MAINLINE FROM THE MAINLINE TAP TO THE PRESSURE REGULATOR.

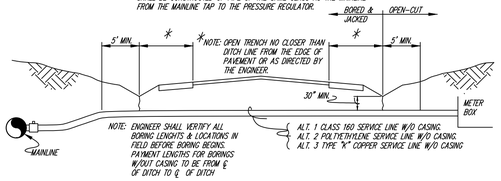

OPPOSITE SIDE SERVICE

N.T.S. (NEH-03)

NOTE: METER BOXES SHALL BE A MIN. OF 36" DEEP & 15" ø & SHALL BE EITHER CAST IRON,CONCRETE, CONCRETE PIPE, OR VITRIFIED CLAY PIPE. THE COVERS FOR 15" ø PIPE SHALL BE CAST IRON 11 1/2" ø & 4" DEEP, STAMPED WITH THE WORD "WATER METER" FORD, NO. 31 OR EQUAL.

BOXES IN GRASS AREAS SHALL BE NO HIGHER THAN 1/2" ABOVE GROUND & NO LOWER THAN FLUSH. BOXES IN CONCRETE OR PAVED AREAS SHALL BE FLUSH. IN AREAS TO BE SODDED, THE TOP OF THE BOXES SHALL BE 2" ABOVE GRADE.

*NOTE: 2' MAX OUTLET PIPE UNLESS APPROVED BY ENGINEER OR ON PLANS. ALL INLET SERVICE LINE OVER 4" OS ADDITIONAL PAY ITEM FOR SAME SIDE SETTINGS.

SERVICE LINE CONNECTORS ARE TO BE MADE W/COMPRESSION FITTINGS ONLY.

SERVICE CLAMPS TO BE MUELLER BRONZE SERVICE CLAMPS FOR PLASTIC PIPE W/SILICON BRONZE TIGHTING SCREWS OR APPROVED EQUAL.

METERS LARGER THAN 2" SHALL BE COMPOUND METERS

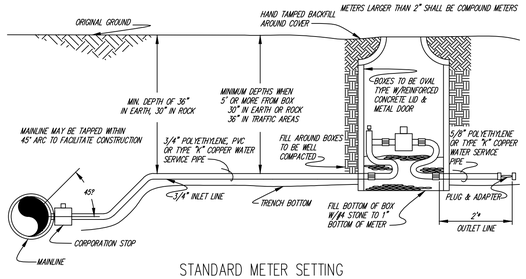

STANDARD METER SETTING

N.T.S. (NEH-05)

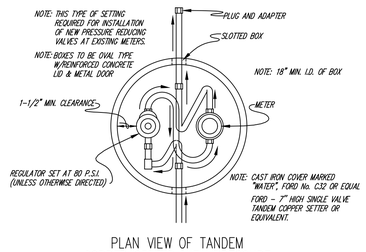

PLAN VIEW OF TANDEM COPPER SETTER WITH PRESSURE REGULATOR ON INLET SIDE OF METER

N.T.S. (NEH-02)

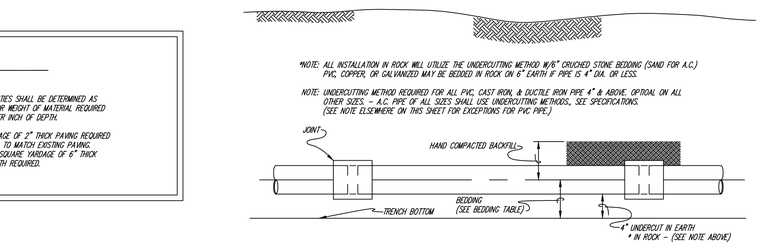

UNDERCUTTING METHOD

N.T.S. (NEH-08)

NOTE: AC PIPE CROSSINGS SUBSTITUTE BANK RUN SAND, IF NOT ENCASED, FOR SPEC. #78 STONE. ALL OTHER PIPE MATERIALS USE STONE.

NOTE: SAWED JOINTS TO BE A MINIMUM 1" DEPTH TO OBTAIN STRAIGHT JOINTS.

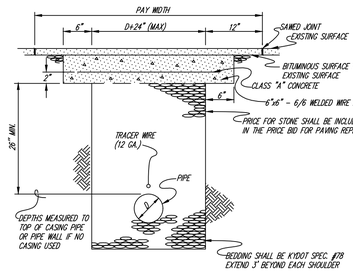

BITUMINOUS HEAVY-DUTY SURFACE MORE THAN 2"

N.T.S. (NEH-03)

NOTE: AC PIPE CROSSINGS SUBSTITUTE BANK RUN SAND, IF NOT ENCASED, FOR SPEC. #78 STONE. ALL OTHER PIPE MATERIALS USE STONE.

NOTE: EXISTING JOINTS OR BREAKS IN PAVEMENT TO BE USED FOR SAW JOINTS IF POSSIBLE. IF DISTANCE FROM SAWED JOINT TO NEAREST EXISTING JOINT IS LESS THAN 6' REMOVE PAVEMENT TO EXISTING JOINT & REPLACE SLAB.

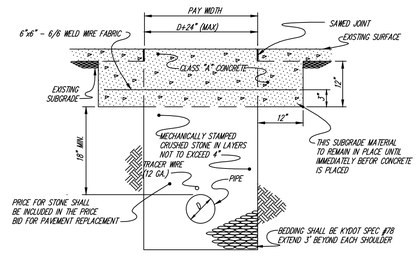

CONCRETE SURFACE

N.T.S. (NEH-04)

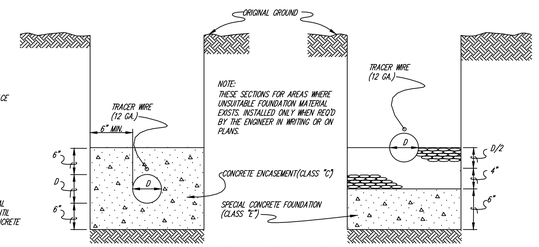

SPECIAL BEDDING FOR UNSTABLE FOUNDATIONS (EXTRA PAY ITEM)

N.T.S. (NEH-11)

NOTE: MAY BE USED ON ALL PVC PIPELINES 4" AND SMALLER AND ALL GALVANIZED OR COPPER LINES. THE BOTTOM MUST BE LEVELED AND FREE OF IRREGULARITIES.

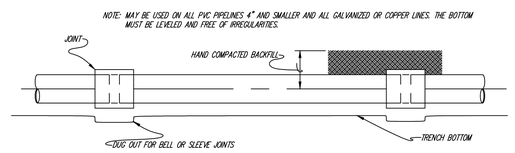

SOLID TRENCH BOTTOM METHOD

N.T.S. (NEH-09)

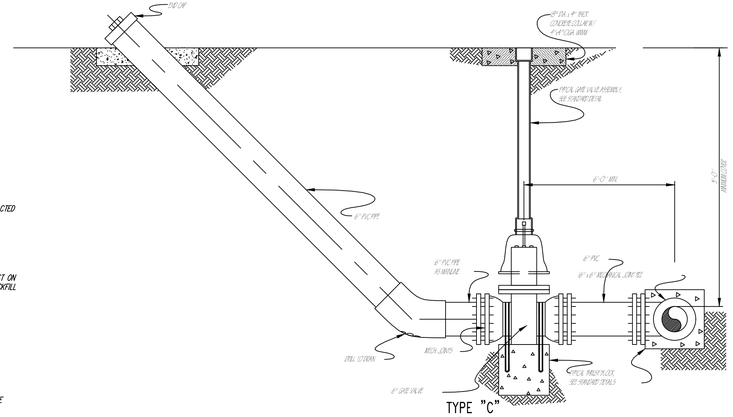

TYPE "C" BLOW-OFF/FLUSH HYDRANT

N.T.S. (NEH-13)

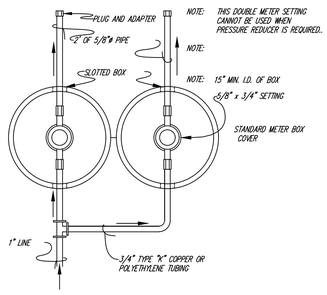

OPTIONAL DOUBLE METER SETTING

N.T.S. (NEH-12A)

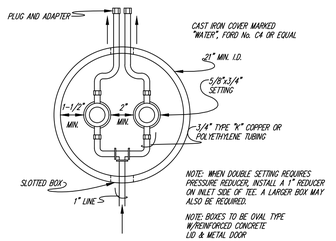

DOUBLE METER SETTING

N.T.S. (NEH-12B)

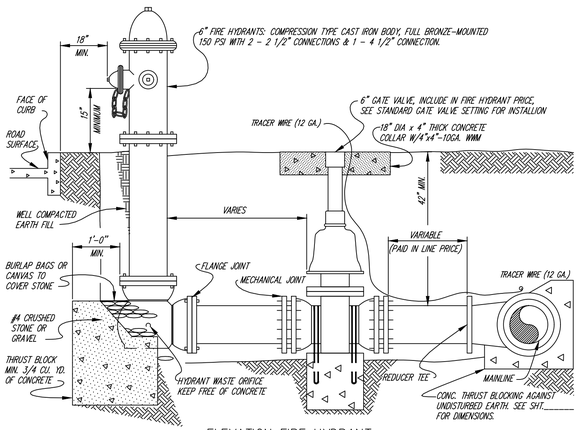

ELEVATION FIRE HYDRANT

N.T.S. (NEH-08)

NOTE:WHERE THE WATERMAIN IS LOCATED IN A STREET OR ROAD, THE AIR RELEASE VALVE AND BOX ARE TO BE LOCATED OFF THE ROAD AS DIRECTED BY THE ENGINEER AND CONNECTED TO THE MAINLINE BY 3/4" SERVICE PIPE. THE SERVICE PIPE WILL BE A SEPERATE PAY ITEM.

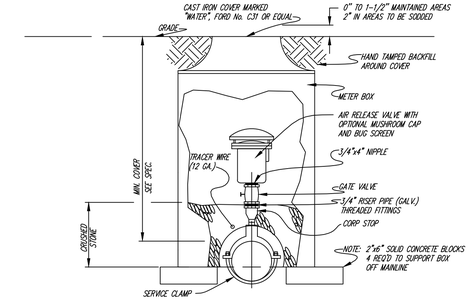

AIR RELEASE VALVES

N.T.S. (NEH-06)

STATE OF KENTUCKY
GLENDON ALLEN ROSS
8242
LICENSED PROFESSIONAL ENGINEER

STANDARD WATER DETAILS

REVISION	BY
	DMP

DATE	
PROJECT NO.	2041-08
FILE NAME	
DESIGNED BY	MSE
DRAWN BY	MSE
CHECKED BY	DST
REVIEWED BY	GAR
DATE	MARCH, 1 2024
SCALE	AS NOTED

COPYRIGHT
NOTE: The property drawings and designs contained in these drawings are the property of Engineers, Architects, Planners, Inc. and are not to be reproduced, changed or copied in any form or manner whatsoever nor are they to be assigned to any third party without first obtaining the written permission and consent of Engineers, Architects, Planners, Inc.

MSE Engineers Architects Planners OF KENTUCKY, INC.
624 Wellington Way
Lexington, KY 40503
www.mseky.com
PHONE: (859)223-5684
FAX: (859)223-2607

DRAWING NO.

WD-1

SHEET 12 OF 13

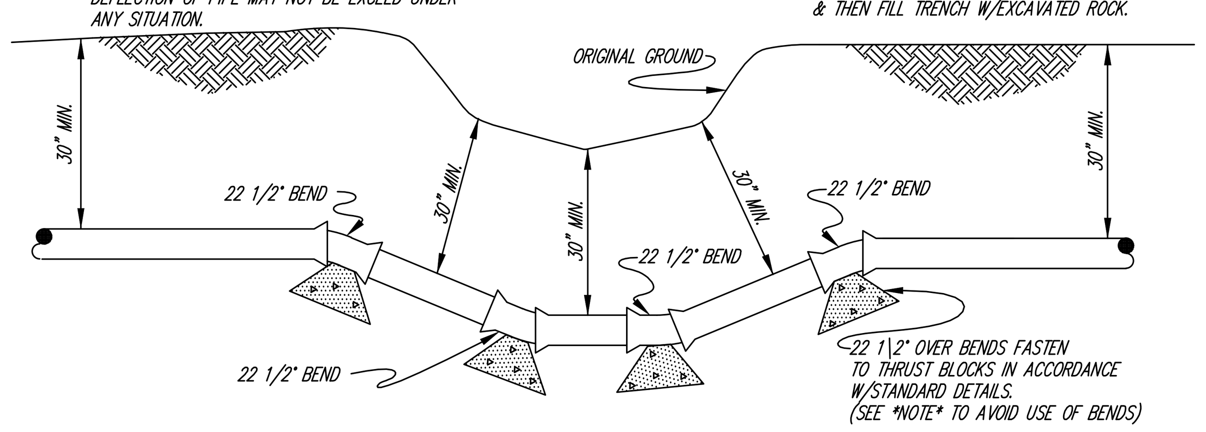

DETAIL OF NORMAL DITCH OR STABLE BED CREEK CROSSING WITHOUT ENCASEMENT

N.T.S. (NO EXTRA PAYMENT) (WD3-05)

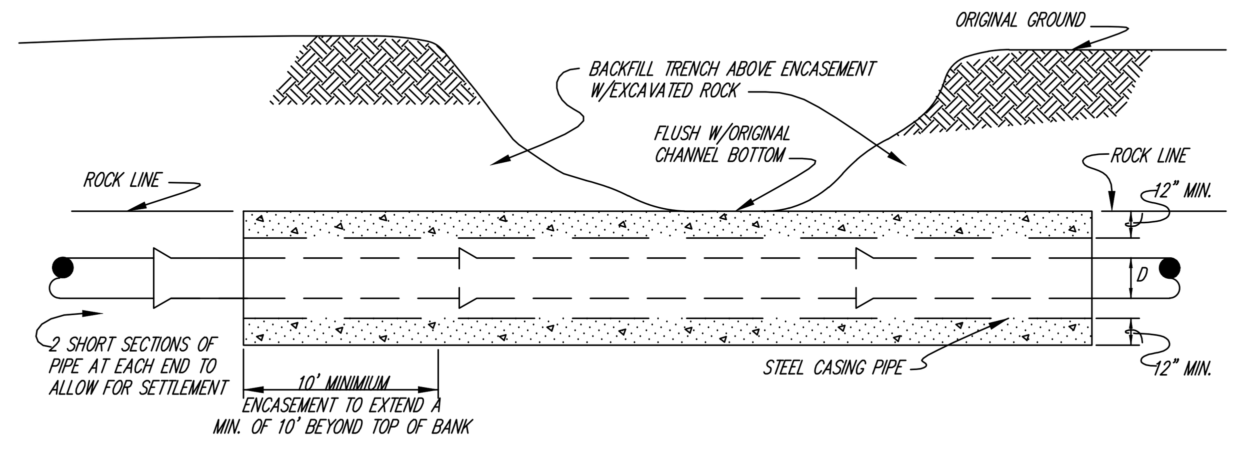

PAY LENGTH FOR SPECIAL CROSSING "B" = ENCASEMENT LENGHT. BID ITEM DOES NOT INCLUDE THE COST OF CARRIER PIPE WHICH IS PAYED UNDER THE BID PRICE FOR LINE INSTALLED.

CONCRETE ENCASEMENT TO BE CLASS "E" CONCRETE AND A MINIMIUM OF 24" WIDE OR (D + 12") AND (12" + 6" + D) HIGH.

SPECIAL CREEK CROSSING TYPE "B" IN SOLID ROCK

N.T.S. (WD3-03)

NOTE: TYPE "A" CREEK CROSSING TO BE FIELD CHECKED BY ENGINEER. PAYMENT FOR CROSSING IS BASED ON PRICE PER BAG REQUIRED AS STATED IN BID PROPOSAL. PRICE SHALL BE INCLUDE ALL RELATED WORK TO INSTALLING THE ANCHORS & LINE. DOES NOT INCLUDE COST OF CARRIER PIPE WHICH IS PAID UNDER THE BID PRICE FOR LINE INSTALLED "OPEN-CUT".

NOTE: FOR TYPE "A" CREEK CROSSING THE TRENCH SHALL BE LAID ON SUCH A GRADE THAT THE PIPE WILL LAY ON THE BOTTOM OF THE TRENCH BY ITS OWN WEIGHT. THE PIPE SHALL BE FURTHER PROTECTED BY PLACING A BAG OF SAKRETE, IN THE BAG & UNOPENED, ON 4 Ft. CENTERS ALONG THE PIPE FOR A MINIMUM DISTANCE OF 10 Ft. BEYOND THE TOP OF THE CREEK BANK OR AS DIRECTED BY THE ENGINEER.

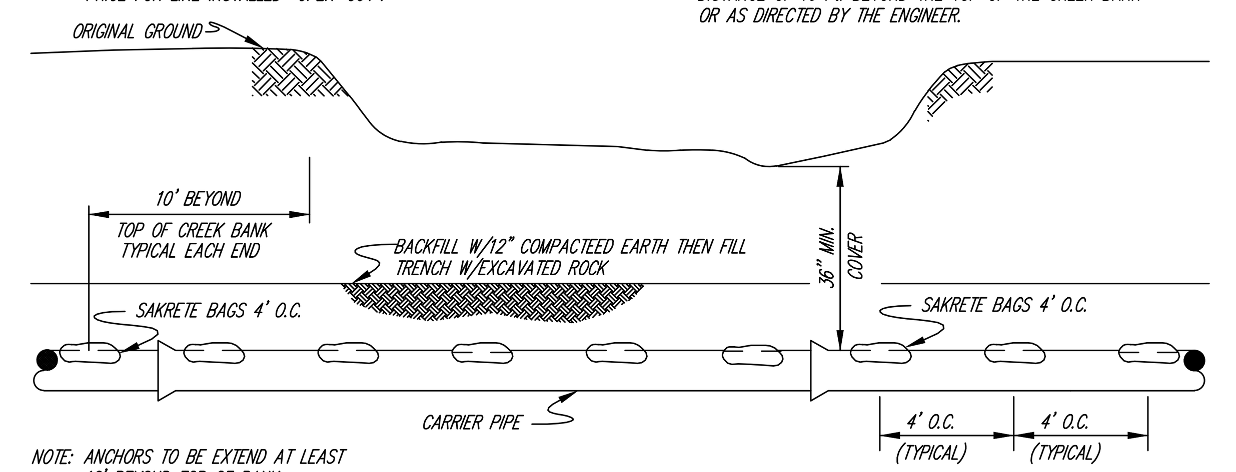

NOTE: ANCHORS TO BE EXTEND AT LEAST 10' BEYOND TOP OF BANK.

TYPICAL INSTALLATION OF LINE ANCHORS FOR SPECIAL CREEK CROSSING TYPE "A" IN LOOSE ROCK OR UNSTABLE MATERIAL

N.T.S. (WD3-04)

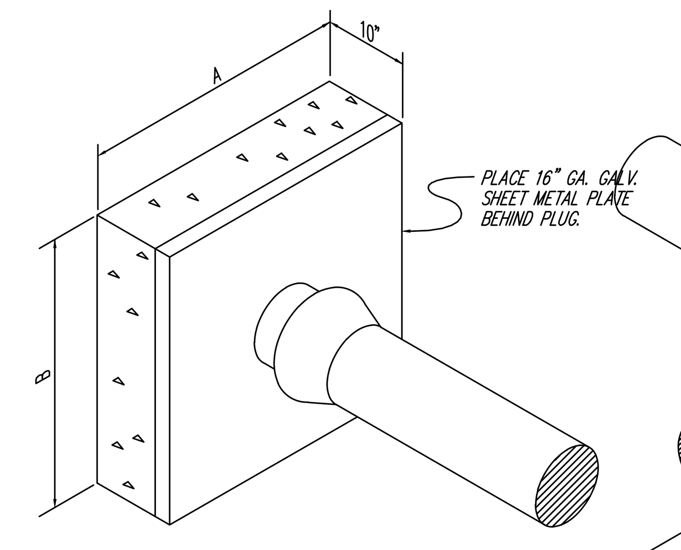

THRUST BLOCK FOR PLUGGED DEADEND LINE

N.T.S. (WD2-01)

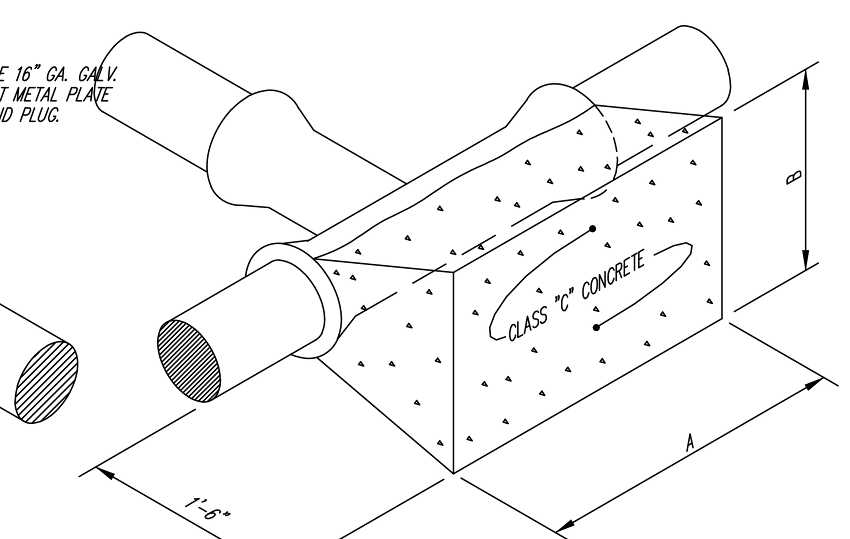

NOTE: ALL THRUST BLOCKS SHALL BE CONSTRUCTED OF CLASS "C" CONCRETE. NO EXTRA PAYMENT FOR THRUST BLOCKS. ALL COST TO BE INCLUDED IN UNIT PRICE BID FOR INSTALLING PIPE.

THRUST BLOCK FOR TEE

N.T.S. (WD2-02)

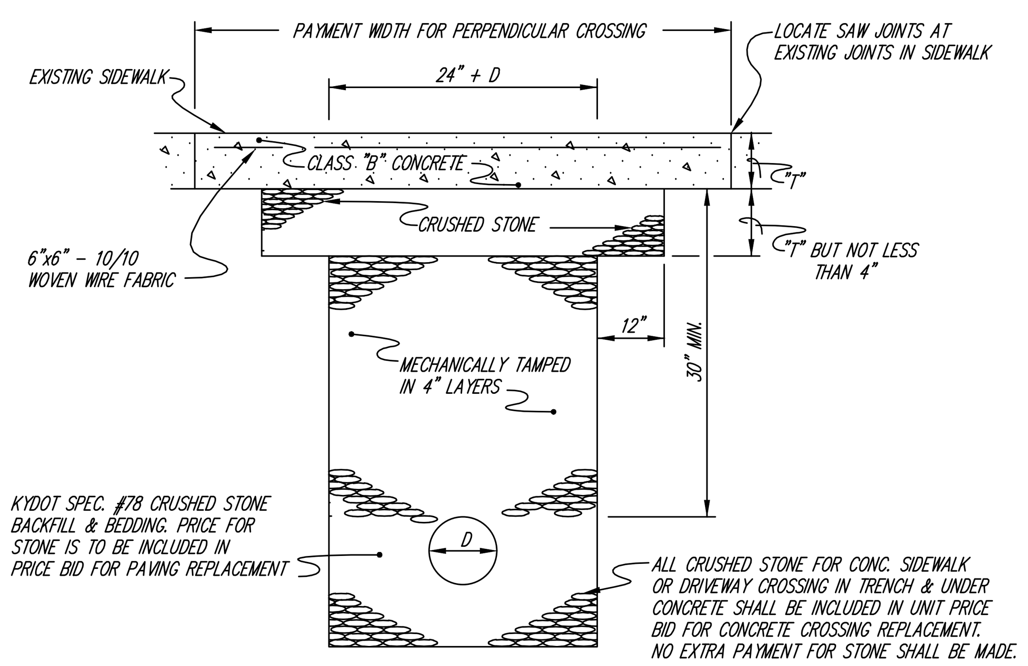

CONCRETE SIDEWALK OR DRIVEWAY CROSSING REPLACEMENT

N.T.S. (WD3-01)

CLASS	P.S.I
A	4000
B	3000
C	2500
D	2000
E	NO 28 DAY STD

28 DAYS CONCRETE STRENGTH

(WD2-05)

NOTE: 1) THIS AREA PAID FOR AS SIDEWALK REMOVAL & REPLACEMENT WHETHER REMOVED OR TUNNELED, IF A SEPERATE BID ITEM IS ESTABLISHED FOR THIS WORK IT WILL BE PAID FOR ON BASIS OF SQ. YDS. REQ'D. FOR A 4" THICK LAYER TO FIT DIMENSIONS SHOWN ON THIS PAGE. ADJUSTED TO REFLECT ACTUAL DEPTH REQ'D.

2) IF NO BID ITEM IS ESTABLISHED, ALL CROSSINGS MUST CONFORM W/THESE DETAILS & COST SHALL BE INCLUDE IN THE PRICE BID FOR LAYING WATER LINE.

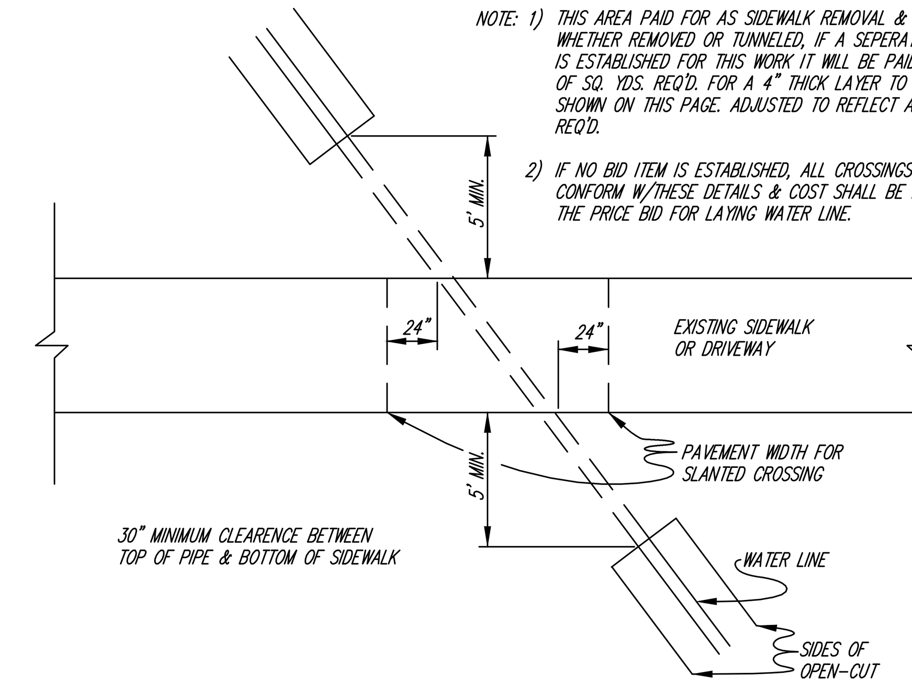

TUNNELING ALTERNATE SIDEWALK CROSSING

N.T.S. (WD3-07)

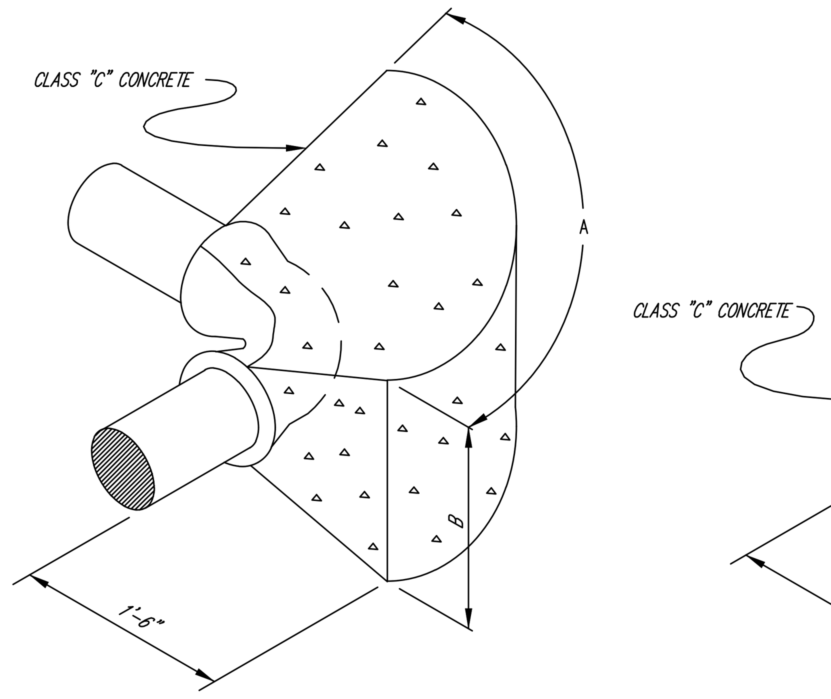

NOTE: 1"x4" STEEL STRAP ANCHORED WITH 1/2" ROD, ALL COATED W/ BITUMASTIC SHALL BE CONSIDER EQUAL TO A PAIR OF #4 BARS FOR USE W/ THRUST BLOCKS.

THRUST BLOCK FOR HORIZONTAL 90° BEND

N.T.S. (WD2-03)

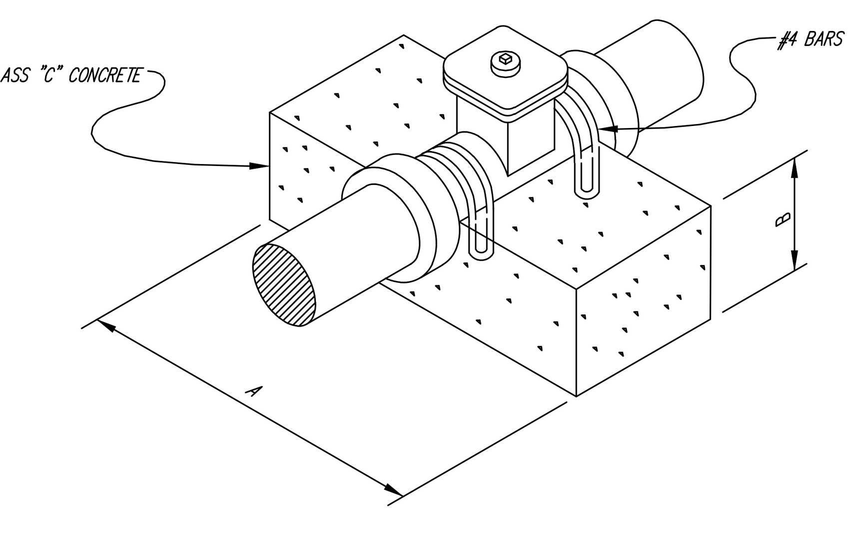

NOTE: APPLY KOPPERS BITUMASTIC #50 TO ALL BARS OR STRAPS USED W/ THRUST BLOCKS

THRUST BLOCK FOR GATE VALVE

N.T.S. (WD2-04)

SOFT-SANDY CLAY SOIL (BEARING STRENGTH = 2,000#/FT.²)									
PIPE SIZE	BEARING AREA 90° BEND	"B"	"A"	BEARING AREA 45° BEND	"B"	"A"	BEARING AREA TEE, GATE VALVE & DEADEND	"B"	"A"
1 1/2"	0.33 FT.²	12"	4"	0.18 FT.²	8"	4"	0.24 FT.²	9"	4"
2"	0.52 FT.²	12"	7"	0.28 FT.²	12"	4"	0.37 FT.²	12"	5"
2 1/2"	0.75 FT.²	12"	9"	0.41 FT.²	12"	5"	0.53 FT.²	12"	7"
3"	1.12 FT.²	18"	9"	0.61 FT.²	12"	8"	0.79 FT.²	18"	7"
4"	1.84 FT.²	24"	12"	1.00 FT.²	18"	8"	1.30 FT.²	24"	8"
6"	3.96 FT.²	36"	16"	2.14 FT.²	26"	12"	2.80 FT.²	30"	14"
8"	6.70 FT.²	54"	18"	3.63 FT.²	30"	18"	4.74 FT.²	36"	19"
10"	10.00 FT.²	60"	24"	5.41 FT.²	44"	18"	7.07 FT.²	43"	24"
12"	13.69 FT.²	60"	33"	7.41 FT.²	36"	30"	9.68 FT.²	47"	30"
14"	16.35 FT.²	66"	36"	9.35 FT.²	40"	34"	12.20 FT.²	60"	30"
16"	19.55 FT.²	72"	40"	11.35 FT.²	60"	28"	14.77 FT.²	60"	36"

I

THRUST BLOCKS (160 P.S.I. DESIGNED)

(WD2-08)

SOLID-SAND & GRAVEL CEMENTED W/CLAY (BEARING STRENGTH = 4,000 #/FT.²)									
PIPE SIZE	BEARING AREA 90° BEND	"B"	"A"	BEARING AREA 45° BEND	"B"	"A"	BEARING AREA TEE, GATE VALVE & DEADEND	"B"	"A"
1 1/2"	0.17 FT.²	6"	4"	0.90 FT.²	4"	4"	0.12 FT.²	5"	4"
2"	0.26 FT.²	10"	4"	0.14 FT.²	6"	4"	0.18 FT.²	7"	4"
2 1/2"	0.23 FT.²	12"	5"	0.20 FT.²	8"	4"	0.26 FT.²	10"	4"
3"	0.56 FT.²	12"	7"	0.30 FT.²	8"	6"	0.40 FT.²	10"	6"
4"	0.92 FT.²	18"	8"	0.50 FT.²	9"	8"	0.65 FT.²	12"	8"
6"	1.98 FT.²	24"	12"	1.07 FT.²	16"	10"	1.40 FT.²	18"	12"
8"	3.35 FT.²	42"	12"	1.82 FT.²	22"	12"	2.37 FT.²	29"	12"
10"	5.00 FT.²	40"	18"	2.71 FT.²	22"	18"	3.54 FT.²	29"	18"
12"	6.85 FT.²	42"	24"	3.71 FT.²	30"	18"	4.84 FT.²	30"	24"
14"	8.80 FT.²	43"	30"	4.67 FT.²	36"	19"	6.16 FT.²	36"	26"
16"	11.20 FT.²	62"	27"	5.66 FT.²	44"	19"	7.50 FT.²	36"	30"

II

THRUST BLOCKS (160 P.S.I. DESIGNED)

(WD2-09)

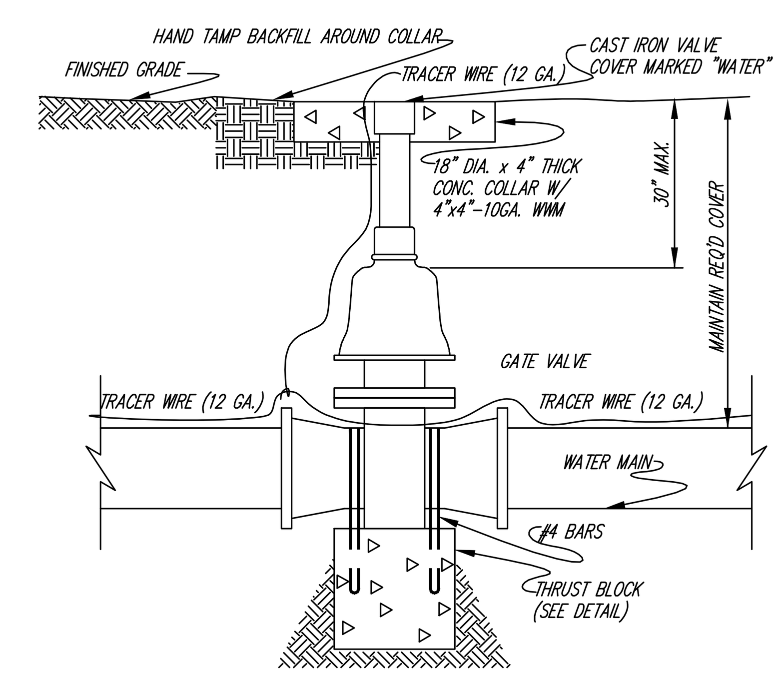

GATE VALVE SETTING

N.T.S. (GCW-02)

CARRIER PIPE NOMINAL SIZE	MINIMUM I.D. OF CASING PIPE FOR: PLASTIC B&S or COIL	C.I. or D.I. B&S	C.I. or D.I M.J.	A.B.S. CEM. or A.B.S.
3/4"	1-1/4"	———	———	———
1"&1-1/4"	2"	———	———	———
1-1/2"	3"	———	———	———
2"	3-1/2"	———	———	———
2-1/2"	4"	———	———	———
3"	5"	8"	10"	———
4"	8"	8"	10"	———
5"	8"	———	———	———
6"	10"	12"	12"	12"
8"	12"	13-1/2"	15-1/2"	13-1/2"
10"	15-1/2"	15-1/2"	17-1/2"	15-1/2"
12"	17-1/2"	17-1/2"	19-1/2"	19-1/2"
14"	———	19-1/2"	21-1/2"	21-1/2"
16"	———	21-1/2"	23-1/2"	23-1/2"
18"	———	25-1/2"	27-1/2"	27-1/2"

WATERLINE CASING PIPE SCHEDULE

(WD3-02)

CARRIER PIPE NOMINAL SIZE	MINIMUM I.D. OF CASING PIPE FOR: PLASTIC B&S or COIL	C.I. or D.I. B&S	C.I. or D.I M.J.	A.B.S. CEM. or A.B.S.	MAX. SKID SUPPORT SPACING L.F. APART
3/4"	1-1/4"	———	———	———	———
1"&1-1/4"	2"	———	———	———	———
1-1/2"	3"	———	———	———	———
2"	3-1/2"	———	———	———	———
2-1/2"	4"	———	———	———	———
3"	5"	8"	10"	———	———
4"	8"	8"	10"	———	4.7"
5"	8"	———	———	———	5.5"
6"	10"	12"	12"	12"	6.3"
8"	12"	13-1/2"	15-1/2"	13-1/2"	7.4"
10"	15-1/2"	15-1/2"	17-1/2"	15-1/2"	8.5"
12"	17-1/2"	17-1/2"	19-1/2"	19-1/2"	9.6"
14"	———	19-1/2"	21-1/2"	21-1/2"	10.0"
16"	———	21-1/2"	23-1/2"	23-1/2"	11.0"
18"	———	25-1/2"	27-1/2"	27-1/2"	12.0"

WATERLINE CASING PIPE SCHEDULE

(WD2-06)

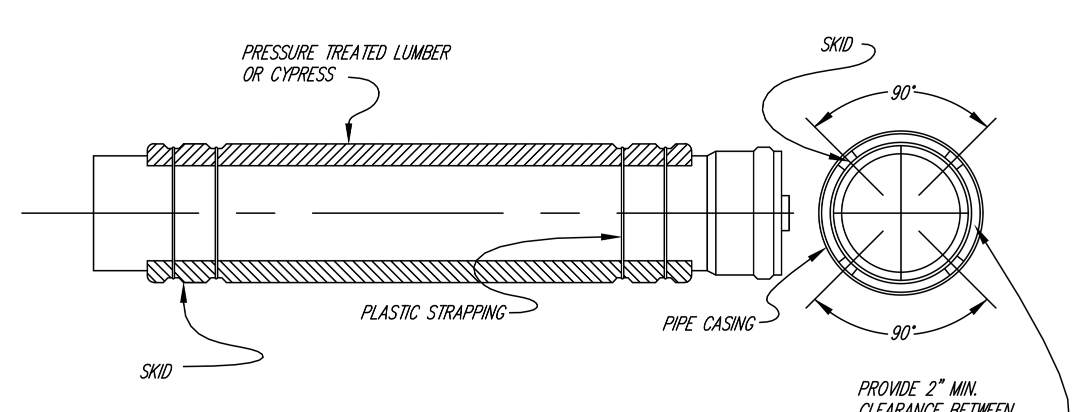

NOTE: CONTRACTOR MAY SUBSTITUTE PRE-FABRICATED CASING INSULATORS SUCH AS MODELS PE, A8 & A12 AS MANUFACTURED BY PSI, INC. FOLLOW MANUFACTURERS RECOMMENDATIONS FOR SIZING AND SPACING. DO NOT LUBRICATE WITH PETROLEUM BASED PRODUCTS. ALL COSTS OF MATERIALS AND CONSTRUCTION OF CASING SKIDS SHALL BE INCLUDED IN THE COST OF SKIDS.

CARRIER PIPE SKIDS FOR ROAD BORES

N.T.S. (WD2-07)

NOTE: UNDER ROAD CROSSINGS STEEL CASING PIPE SHALL BE REQUIRED, PIPES 4" & LESS SHALL BE NEW SCHEDULE 40, PIPES LARGER THAN 4" SHALL HAVE MINIMUM WALL THICKNESS OF 0.250". ALL BORED & JACKED ENCASEMENT PIPE SHALL BE INSTALLED IN BORE HOLES NO LARGER THAN THE OUTSIDE DIAMETER OF THE ENCASEMENT PIPE.

NOTE: ALL JOINTS TO BE SOLIDLY WELDED, END OF CASING TO BE SEALED W/CONCRETE AFTER LINE HAS BEEN INSTALLED & TESTED.

NOTE: OPEN TRENCH NO CLOSER THAN THE DITCHLINE FROM THE EDGE OF THE PAVEMENT OR AS DIRECTED BY STATE, COUNTY, OR MUNICIPAL SPECIFICATIONS.

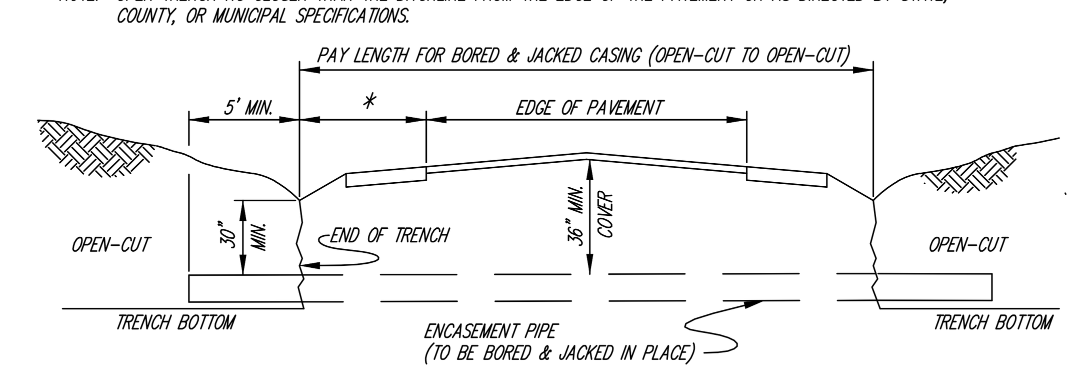

SECTION VIEW OF ROAD CROSSING

N.T.S. (WD3-06)

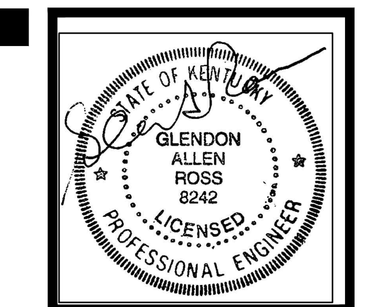

STANDARD WATER DETAILS

DATE	REVISION	BY
		DWP

PROJECT NO. FILE NAME	2041-08
DESIGNED BY	MSE
DRAWN BY	MSE
CHECKED BY	DST
REVIEWED BY	GAR
DATE	MARCH, 1 2024
SCALE	As Noted

MSE OF KENTUCKY, INC.
Engineers Architects Planners
624 Wellington Way
Lexington, KY 40503
www.mselex.com
PHONE: (859)223-5694
FAX: (859)223-2607

DRAWING NO.

WD-2

SHEET 13 OF 13